# EVC10A

## Connection cable

VDOAH040VAT00,6H04STAH040VAT

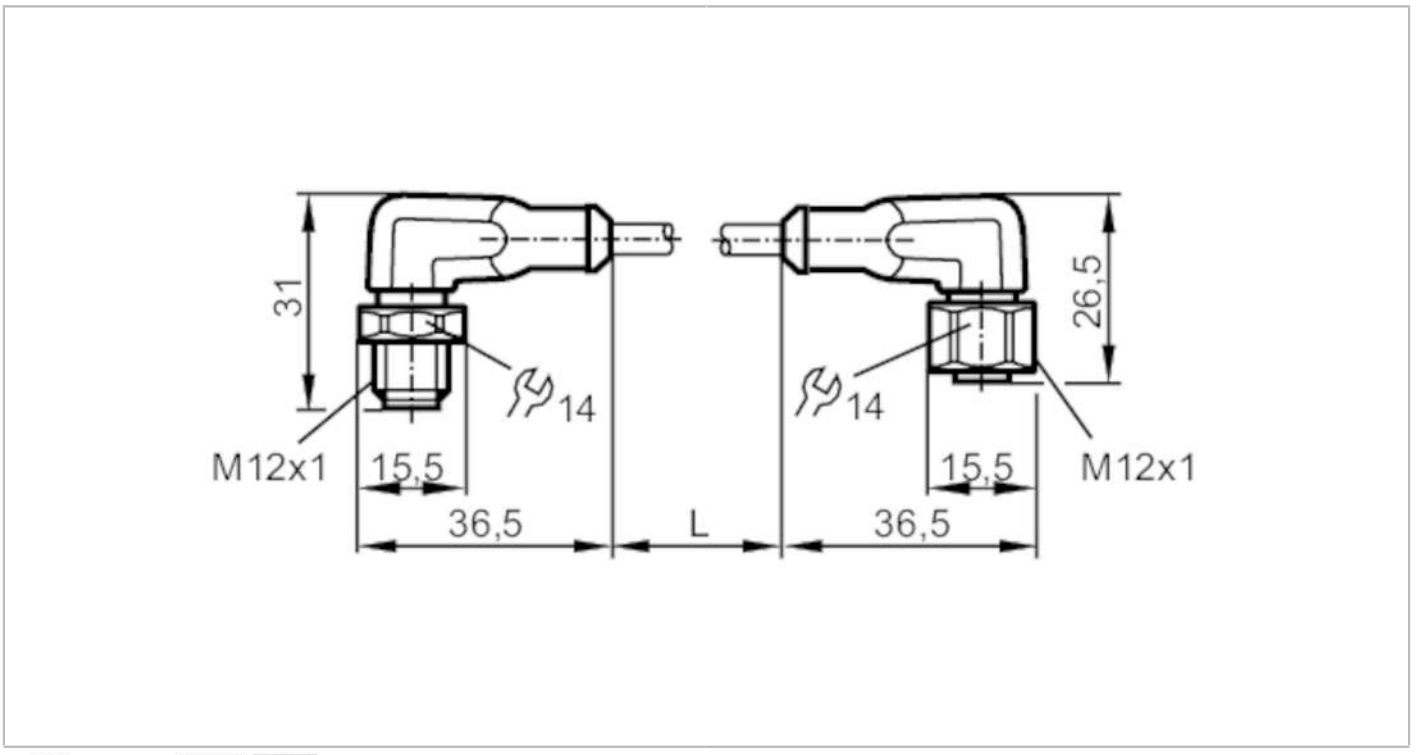


| | | |
|---|---|---|
| **Application** | | |
| Special feature | | Halogen-free; Gold-plated contacts |
| Compatible with paint | | yes |
| **Electrical data** | | |
| Operating voltage | [V] | < 60 AC/DC |
| Protection class | | II |
| Max. current load total | [A] | 2 |
| **Operating conditions** | | |
| Ambient temperature | [°C] | -20...60 |
| Protection | | IP 67;  (when used outside the hazardous area: IP 68 / IP 69K) |
| **Tests / approvals** | | |
| Approval | | BVS 08 ATEX E 109 U; IECEx BVS 08.0041 U |
| ATEX marking | | II 3G Ex ec IIC Gc; II 2D Ex tb IIIC Db IP65/IP67 |
| **Mechanical data** | | |
| Weight | [g] | 70.5 |
| Dimensions | [mm] | 31 x 15.5 x 36.5 |
| Materials | | housing: TPU orange; Sealing: FKM |
| Material nut | | stainless steel (1.4404 / 316L) |
| **Remarks** | | |
| Pack quantity | | 1 pcs. |

# EVC10A

## Connection cable

VDOAH040VAT00,6H04STAH040VAT

### Electrical connection - plug

Connector: 1 x M12, angled; coding: A; Locking: stainless steel (1.4404 / 316L); Contacts: gold-plated; Tightening torque: 1.2...1.5 Nm




### Electrical connection

Cable: 0.6 m, PUR, Halogen-free, black, Ø 4.9 mm; 4 x 0.34 mm² (42 x Ø 0.1 mm )

Connection

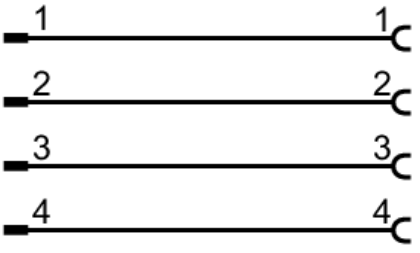


### Electrical connection - socket

Connector: 1 x M12, angled; coding: A; Locking: stainless steel (1.4404 / 316L); Contacts: gold-plated; Tightening torque: 1.2...1.5 Nm

