Brand of NTN corporation

Technical data

ESFLE202

Bearing units



Grey cast housing, radial insert ball bearing with eccentric locking collar, single lip seal

KIT CONTENT

ES.202.G2, FLE203

VISUAL (S)

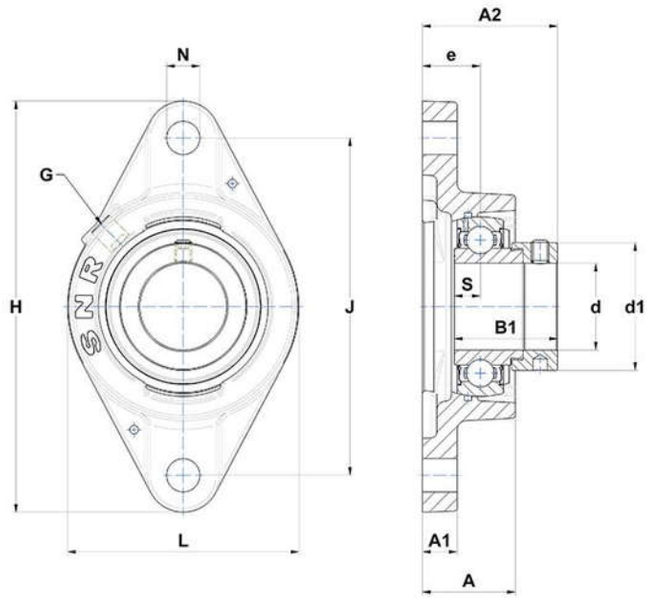

PRODUCT DEFINITION

Brand	SNR
A - Housing height	26 mm
A1 - Housing foot height / flange height	9,5 mm
A2 - Total height from mounting surface	39,1 mm
B - Width of Inner Ring	19,1 mm
B1 - Overall width Inner Ring	28,6 mm

NTN Europe
1 rue des Usines · BP 2017 · 74010 Annecy Cedex · France · Tel. +33 (0)4 50 65 30 00
S.A. au capital de 322 639 919 € · RCS ANNECY B 325 821 072 · Id. Fiscale : FR 48 325 821 072
SIRET 325 821 072 00015 · Code APE 2815 Z · Code NACE 28.15

PRODUCT DEFINITION	
d - Shaft diameter	15 mm
d1 - Outer dia of eccent. Lock. collar / nut of adapter sleeve	27,2 mm
e - Distance mounting surface to bearing center	17 mm
G - Grease fitting	M6
H - Housing length, width or diameter	99 mm
J - Mounting holes distance	76,5 mm
L - Housing width / diameter	57 mm
N - Mounting hole dimension	11,5 mm
S - Distance front side/bearing centre	6,5 mm

PRODUCT PERFORMANCE	
C - Dynamic load rating	9550000 mN
C0 - Static load rating	4780000 mN
Operating temperature min.	253,15 °K
Operating temperature max.	373,15 °K

OTHER FEATURES	
Mass	0,39 kg
Recommended tightening torque for set screw	5.5 N-m