T-Splitters

BCC M414-M313-M313-U0054-000
Order Code: BCC0F59

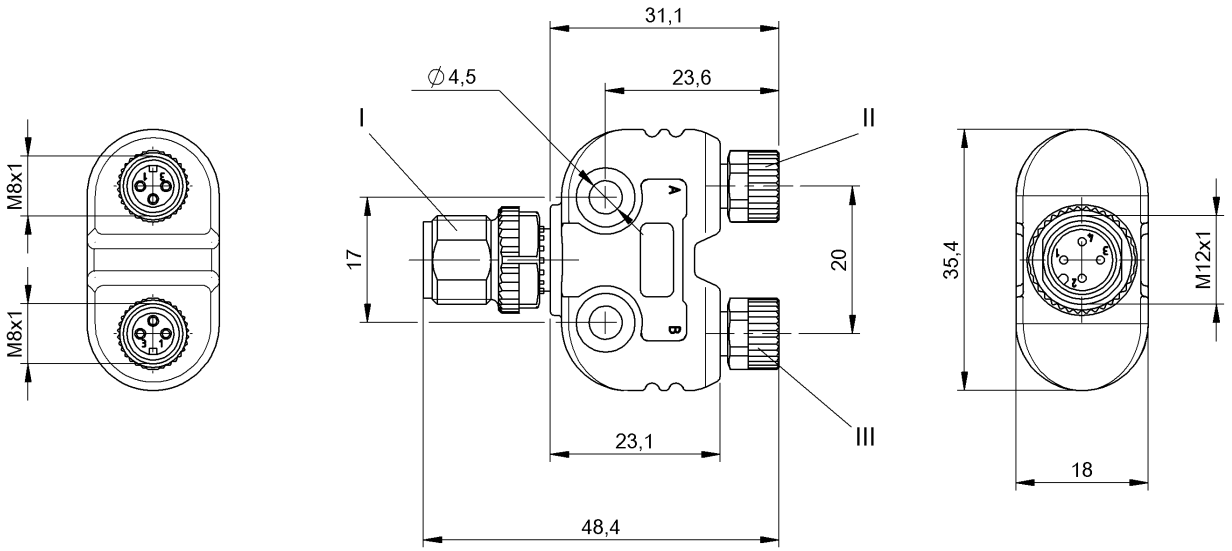

Basic features

Approval/Conformity	EAC WEEE

Electrical connection

Connection 1	M12x1-Male, 4-pin, A-coded
Connection 2	M8x1-Female, 3-pin, A-coded
Connection 3	M8x1-Female, 3-pin, A-coded
Number of pins	4/3/3

Electrical data

Operating voltage Ub	30 VDC / 30 VAC
Rated current (40 °C)	4.0 A

Environmental conditions

Ambient temperature	-25...85 °C
IP rating	IP68

Material

Material contact carrier	PUR
Material contacts	Brass/Bronze/Bronze
Material cover nut	Die-cast zinc/Die-cast zinc/Die-cast zinc
Material grip	PUR

Mechanical data

Tightening torque pigtail	0.6 Nm/0.4 Nm/0.4 Nm

Remarks

Enclosure rating per IEC 60529, only in screwed state with the associated mating piece.

Connector Drawings

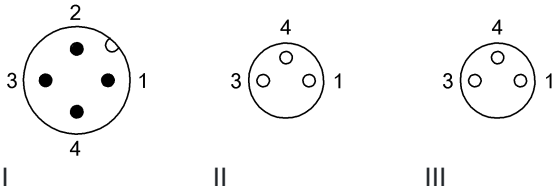

BCC M414-M313-M313-U0054-000
Order Code: BCC0F59

Wiring Diagrams

