120x120x25 mm

SUNON

46-80 CFM



Model	P/N	Bearing ● VAPO ○ BALL ⊙ Sleeve	Rating Voltage (VAC)	Freq. (Hz)	Power Current (AMP)	Power Consumption (WATTS)	Speed (RPM)	Air Flow (CFM)	Static Pressure (Inch-H_2O)	Noise (dBA)	Weight (g)
DP201AT	2122HSL.GN	⊙	220-240	50/60	0.10/0.09	19/19	2000/2300	64/78	0.13/0.16	43/46	330
DP201AT	2122HST.GN	⊙	220-240	50/60	0.10/0.09	19/19	2000/2300	64/78	0.13/0.16	43/46	330
DP203AT	2122LSL.GN	⊙	220-240	50/60	0.07/0.07	14/13	1600/1800	46/53	0.11/0.12	35/38	330
DP203AT	2122LST.GN	⊙	220-240	50/60	0.07/0.07	14/13	1600/1800	46/53	0.11/0.12	35/38	330
DP201AT	2122HBL.GN	○	220-240	50/60	0.10/0.09	19/18	2150/2500	66/80	0.14/0.17	44/48	330
DP201AT	2122HBT.GN	○	220-240	50/60	0.10/0.09	19/18	2150/2500	66/80	0.14/0.17	44/48	330
DP203AT	2122LBL.GN	○	220-240	50/60	0.07/0.07	14/13	1700/1900	47/54	0.12/0.13	37/40	330
DP203AT	2122LBT.GN	○	220-240	50/60	0.07/0.07	14/13	1700/1900	47/54	0.12/0.13	37/40	330

Frame : Aluminum alloy

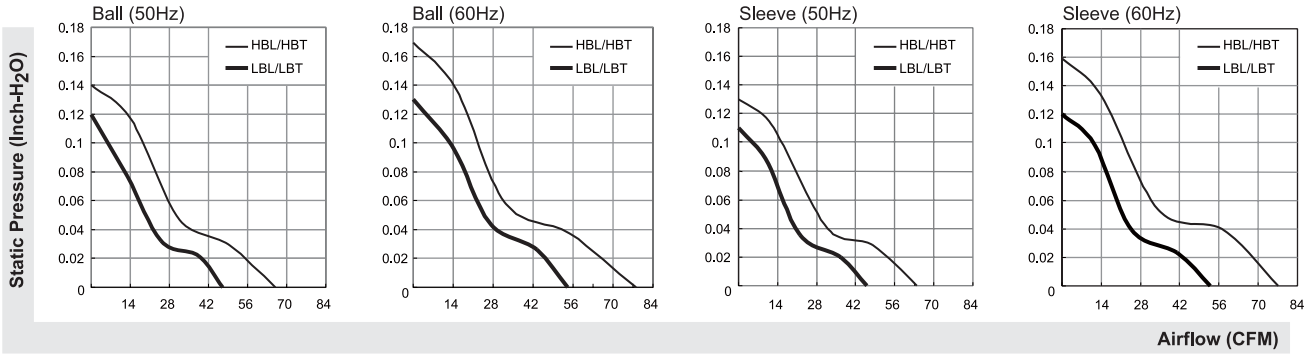

UNITS:mm

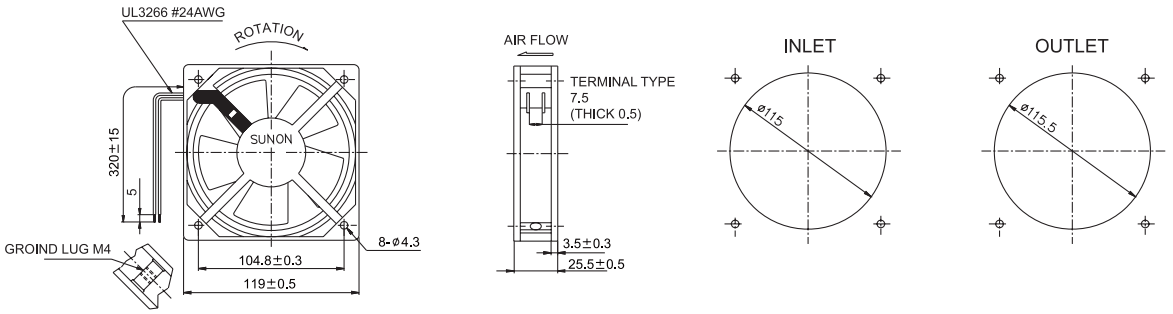

*All model could be customized on voltage or any other requirements to fit your need.
*Specifications subject to change without notice. Please Visit SUNON web site at http://www.sunon.com for update information.

Model Numbering System

General AC Fan

Ex) **SF11580AT 1 08 2 H B L .GN**

MODEL SERIES
SFxxx
SPxxx
DPxxx

VOLTAGE
1 : 115 VAC
2 : 220 -240 VAC

FRAME SIZE
08 : 80 mm
09 : 92 mm
12 : 120 mm

FRAME THICKNESS
2 : 25 mm
3 : 38 mm

SPEED
X : Super
H : High
M : Middle
L : Low

BEARING SYSTEM
B : Ball
S : Sleeve

TERMINALS
T : Terminal
L : Lead wire

RoHS Compliance

New Type AC Fan

Ex) **A 1 17 5 – H B T**

MODEL SERIES
A : New AC fan series
AB : New AC blower series
MA : MagLev AC Fan series

VOLTAGE
1 : 115 VAC
2 : 220-240 VAC
3 : 380 VAC

FRAME SIZE
08 : 80 mm
09 : 92 mm
12 : 120 mm
17 : 172 mm
25 : 254 mm

FRAME THICKNESS
2 : 25 mm
3 : 31~38mm
5 : 50~51 mm
7 : 72 mm
9 : 89~90mm

SPEED
X : Super
H : High
M : Middle
L : Low

BEARING SYSTEM
V: MagLev
S : Sleeve
B : Ball

TERMINALS
T : Terminal
L : Lead wire

P/N

P/N Suffixes have the following significance :

T	: Thermal Cutout
C	: Capacitor
TC	: Alveolate Motor with Thermal Cutout and Capacitor
TC.R	: Round Frame , Alveolate Motor with Thermal Cutout and Capacitor
N	: New frame
GN	: RoHS compliance

* Alveolate Motor only available in P/N : TC model