REVISION HISTORY			
REV	DATE	BY	DESCRIPTION
I	10JAN2019	YBS/VK	PRN: P2019-0089

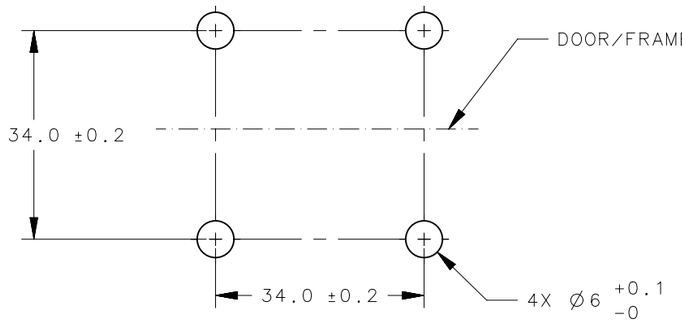

PANEL PREPARATION

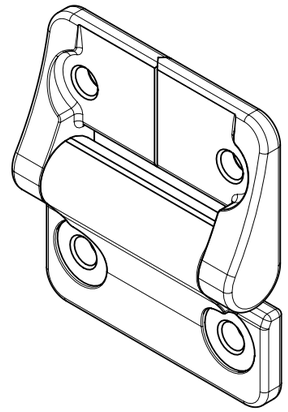

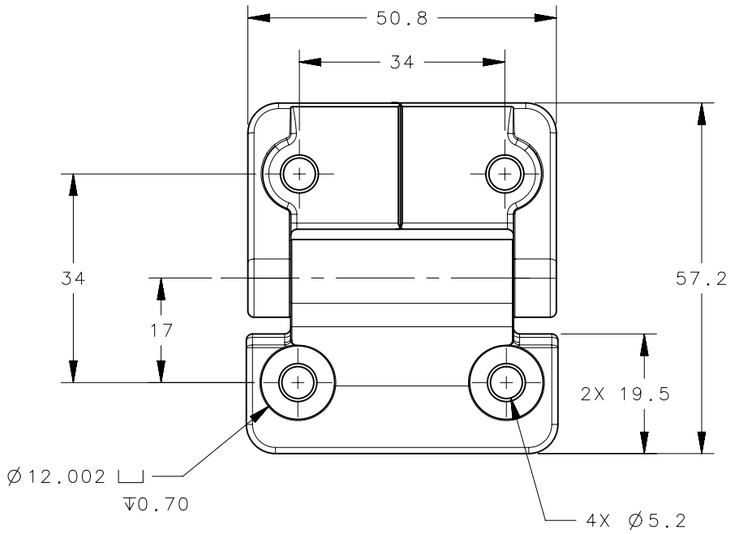

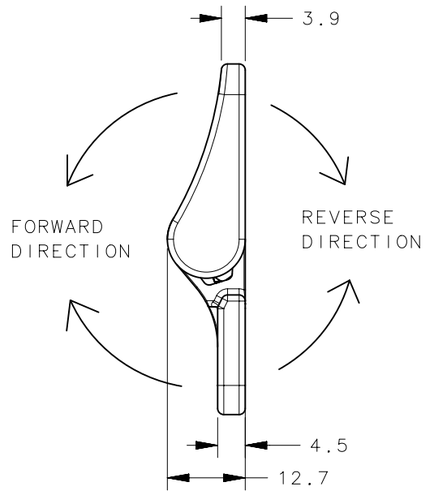

PART NUMBER	FORWARD TORQUE	REVERSE TORQUE
E6-10-408-XX	0.9 N-m (8.0 in-lbs)	
E6-10-416-XX	1.8 N-m (16.0 in-lbs)	
E6-10-420-XX	2.3 N-m (20.0 in-lbs)	
E6-10-430-XX	3.4 N-m (30.0 in-lbs)	
E6-10-420F-XX	2.3 N-m (20.0 in-lbs)	1.5 N-m (13.6 in-lbs)
E6-10-430F-XX	3.4 N-m (30.0 in-lbs)	2.3 N-m (20.4 in-lbs)
E6-10-440F-XX	4.5 N-m (40.0 in-lbs)	3.1 N-m (27.3 in-lbs)
E6-10-420R-XX	1.5 N-m (13.6 in-lbs)	2.3 N-m (20.0 in-lbs)
E6-10-430R-XX	2.3 N-m (20.4 in-lbs)	3.4 N-m (30.0 in-lbs)
E6-10-440R-XX	3.1 N-m (27.3 in-lbs)	4.5 N-m (40.0 in-lbs)

NOTES:

1. PERFORMANCE TORQUE TOLERANCE ±20%
2. DESIGNED TO ACCEPT M5 OR No. 10 SCREW OR EQUIVALENT
3. MATERIAL AND FINISH:
   HINGE LEAVES: DIE CAST ZINC, SEE TABLE FOR FINISH
   SHAFT & PIN: STEEL
   O-RINGS: BUNA-N RUBBER
   BEARINGS: DIE CAST ZINC

PART NO.	DESCRIPTION	FINISH
E6-10-4XXX-10	ASSEMBLY - COATED	WHITE POWDER
E6-10-4XXX-70	ASSEMBLY - COATED	SILVER POWDER
E6-10-4XXX-50	ASSEMBLY - COATED	BLACK POWDER
E6-10-4XXX-33	ASSEMBLY - AS CAST	NATURAL

CPB NUMBER 2018-0373

SURFACE AREA

VOLUME

PROPRIETARY ITEM

EXCEPT FOR USES EXPRESSLY GRANTED IN WRITING, INFORMATION DISCLOSED HEREON IS CONFIDENTIAL AND ALL RIGHTS, PATENT AND OTHERWISE, ARE RESERVED BY SOUTHCO, INC.

THIRD ANGLE PROJECTION

MILLIMETERS [IN]

TOLERANCES UNLESS OTHERWISE NOTED

ALL DIMENSIONS WITHOUT TOLERANCES ARE FOR REFERENCE ONLY.

PER ASME Y14.5M-1994

southco®
CONNECT·CREATE·INNOVATE

DESCRIPTION
E6 400 SERIES
HINGE ASSEMBLY

SIZE	SYSTEM	DWG NO.
A3	NX	J-E6-10-4-50

DRAWN BY	DATE	SCALE	SHEET
AS	18AUG2006	1:1	1 OF 1