EXPERT Screwdrivers for slotted head screws (flared)



Description:

- ISO 2380-1
- ISO 2380-2
- trimaterial ergonomic comfortable and effective handle.
- Bit color code: red.
- Round chrome plated blade in Chrome Vanadium steel.
- Sand-blasted tip.

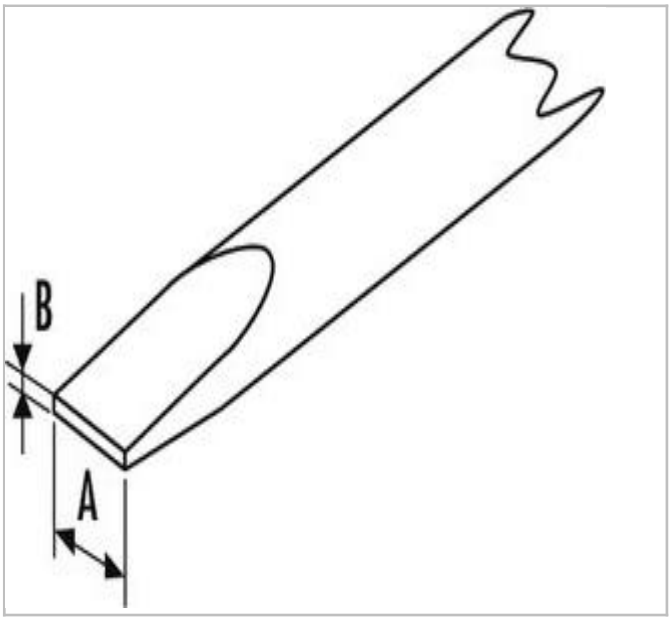

© FACOM 2020

	Diameter [mm]	Length L1 [mm]	Length L2 [mm]	Weight [g]	Tip Size ["]	Handle Style ["]	Ratcheting ["]
E160201	27	177	75	28	3/32"	Tri-Material	Non-Ratcheting
E160206	40	241	125	117	5/16"	Tri-Material	Non-Ratcheting
E165016	43	202	100	42	3/16"	Tri-Material	Non-Ratcheting
E165098	32	205	100	69	1/4"	Tri-Material	Non-Ratcheting
E165138	40	291	175	177	3/8"	Tri-Material	Non-Ratcheting
E165141	40	266	150	123	5/16"	Tri-Material	Non-Ratcheting
E165479	30	173	75	31	1/8"	Tri-Material	Non-Ratcheting
E165480	38	198	100	32	1/8"	Tri-Material	
E165481	47	227	125	46	3/16"	Tri-Material	Non-Ratcheting
E165482	32	230	125	73	5/16"	Tri-Material	Non-Ratcheting
E165483	32	227	150	47	1/4"	Tri-Material	Non-Ratcheting

© FACOM 2020