FY 50 TF

Compliance with standard	ISO
Housing material	Cast iron
Sealing solution	Standard seals with additional flingers

Dimensions

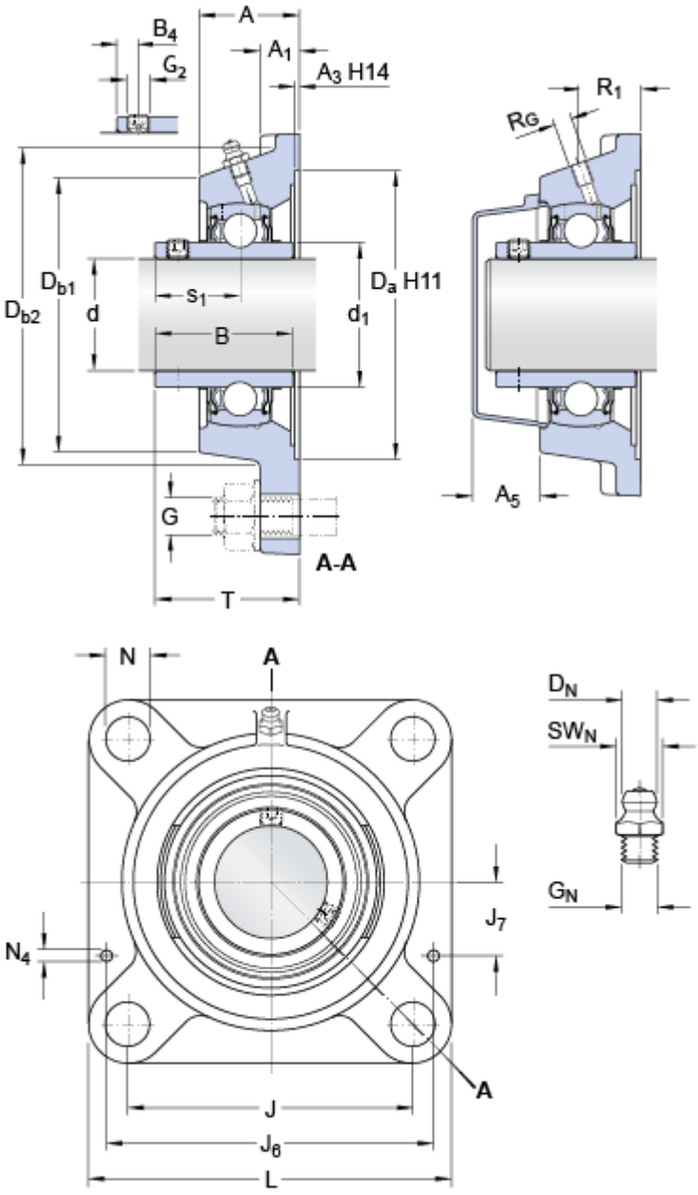

d		50	mm
d_1	≈	62.51	mm
A		43	mm
A_1		15	mm
A_3		3.2	mm
A_5		33	mm
B		51.6	mm
B_4		9	mm
D_a		125.4	mm
D_{b1}		107	mm
D_{b2}		118	mm
J		111	mm
L		143	mm
N		18	mm
s_1		32.6	mm
T		60.6	mm

Grease fitting

D_N	6.5	mm
SW_N	7	mm
G_N	1/4-28 SAE-LT	

Threaded hole

R_G	1/4-28 UNF	
R_1	28.5	mm

Dowel pins

	J_6	129	mm
	J_7	35.5	mm
	N_4	4	mm

Calculation data

Basic dynamic load rating	C	35.1	kN
Basic static load rating	C_0	23.2	kN
Fatigue load limit	P_u	0.98	kN
Limiting speed		4000	r/min
with shaft tolerance h6			

Mass

Mass bearing unit		2.3	kg

Mounting information

Thread grub screw	G_2	M10x1	
Hexagonal key size for grub screw	N	5	mm
Recommended tightening torque for grub screw		16.5	N·m
Recommended diameter for attachment bolts, mm	G	16	mm
Recommended diameter for attachment bolts, inch	G	0.625	in

Included products

Housing	FY 510 M
Bearing	YAR 210-2F

Associated products

End cover	ECY 210