Compact Illuminated Tactile Switch with 2 LEDs

- Compact construction (10 x 10 x 11 mm height) with bright and uniform illumination.
- Three-color illumination (red LED + green LED = orange).
- Standard force (1.57 N) and high-force (2.26 N) models.
- RoHS Compliant



NEW

Features

Bright and uniform illumination
- Compact construction (10 × 10 × 11 mm height) equipped with 2 LEDs.
- Uniquely constructed diffusion panel.

Three-color illumination
- Simultaneous use of red and green LEDs create a third color (orange).

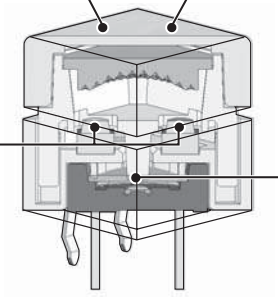

Snap-action contact construction for a positive click action.
- Models available with two different operating forces, standard force (1.57 N) and high-force (2.26 N).

High contact reliability
- Sealed switch part provides high contact reliability against dust.

Model Number Structure

B3W-900 □ – □ □ □
1 2 3 4

1. Operating force
- 0: Standard (OF = 1.57 N)
- 2: High-force (OF = 2.26 N)

2. LED color
- R: Red
- G: Green
- HG: Green (high brightness)
- Y: Yellow
- B: Blue
- RG: Red + Green (Combination of LED colors)

3. No. of LEDs
- 1: 1
- 2: 2

4. Cap
- R: Red
- G: Green
- Y: Yellow
- B: Blue
- C: Transparent
- N: Milky white

Note 1. Switches with two LEDS are only available with Transparent or Milky White caps.

Note 2. If a tricolour operation is required, use the Red+ Green (RG) combination with the milky white cap. Simultaneous illumination of these two LEDs will produce Orange.

Ordering Information

■ Standard force

Force	LED Colour	No. of LEDs	Cap colour	Model
Standard force (OF = 1.57 N)	Blue	1	Blue	B3W-9000-B1B
			Transparent	B3W-9000-B1C
			Milky white	B3W-9000-B1N
		2	Blue	B3W-9000-B2B
			Transparent	B3W-9000-B2C
			Milky white	B3W-9000-B2N
	Green	1	Green	B3W-9000-G1G
			Transparent	B3W-9000-G1C
			Milky white	B3W-9000-G1N
		2	Green	B3W-9000-G2G
			Transparent	B3W-9000-G2C
			Milky white	B3W-9000-G2N
	Green (High brightness)	1	Green	B3W-9000-HG1G
			Transparent	B3W-9000-HG1C
			Milky white	B3W-9000-HG1N
		2	Green	B3W-9000-HG2G
			Transparent	B3W-9000-HG2C
			Milky white	B3W-9000-HG2N
	Red	1	Red	B3W-9000-R1R
			Transparent	B3W-9000-R1C
			Milky White	B3W-9000-R1N
		2	Red	B3W-9000-R2R
			Transparent	B3W-9000-R2C
			Milky white	B3W-9000-R2N
	Yellow	1	Yellow	B3W-9000-Y1Y
			Transparent	B3W-9000-Y1C
			Milky White	B3W-9000-Y1N
		2	Yellow	B3W-9000-Y2Y
			Transparent	B3W-9000-Y2C
			Milky white	B3W-9000-Y2N
	Red+ Green	2	Transparent	B3W-9000-RG2C
			Milky White	B3W-9000-RG2N

■ High-force

Force	LED Colour	No. of LEDs	Cap colour	Model
Force High-force (OF = 2.26N)	Blue	1	Blue	B3W-9002-B1B
			Transparent	B3W-9002-B1C
			Milky white	B3W-9002-B1N
		2	Blue	B3W-9002-B2B
			Transparent	B3W-9002-B2C
			Milky white	B3W-9002-B2N
	Green	1	Green	B3W-9002-G1G
			Transparent	B3W-9002-G1C
			Milky white	B3W-9002-G1N
		2	Green	B3W-9002-G2G
			Transparent	B3W-9002-G2C
			Milky white	B3W-9002-G2N
	Green (High brightness)	1	Green	B3W-9002-HG1G
			Transparent	B3W-9002-HG1C
			Milky white	B3W-9002-HG1N
		2	Green	B3W-9002-HG2G
			Transparent	B3W-9002-HG2C
			Milky white	B3W-9002-HG2N
	Red	1	Red	B3W-9002-R1R
			Transparent	B3W-9002-R1C
			Milky white	B3W-9002-R1N
		2	Red	B3W-9002-R2R
			Transparent	B3W-9002-R2C
			Milky white	B3W-9002-R2N
	Yellow	1	Yellow	B3W-9002-Y1Y
			Transparent	B3W-9002-Y1C
			Milky white	B3W-9002-Y1N
		2	Yellow	B3W-9002-Y2Y
			Transparent	B3W-9002-Y2C
			Milky white	B3W-9002-Y2N
	Red + Green	2	Transparent	B3W-9002-RG2C
			Milky white	B3W-9002-RG2N

Specifications

■ Ratings/Characteristics (Same for Both Standard and High-force Switches)

Switching capacity	1 to 50 mA, 5 to 24 VDC (resistive load)
Ambient operating temperature	-25°C to 70°C at 60% max. humidity (with no icing or condensation)
Ambient operating humidity	35% to 85% (at 5 to 35°C)
Contact configuration	SPST-NO Momentary
Contact resistance	100 mΩ max. (initial value) (rated: 1 mA, 5 VDC)
Insulation resistance	100 MΩ min. (at 250 VDC)
Dielectric strength	500 VAC, 50/60 Hz for 1 min
Bounce time	5 ms max.
Vibration resistance	Malfunction: 10 to 55 Hz, 1.5 mm double amplitude
Shock resistance	Destruction: 1,000 m/s² {approx. 100 G} max. Malfunction: 100 m/s² {approx. 10 G} max.
Life expectancy	Switch section 1.57 N (standard force):1,000,000 operations min. 2.26 N (high-force):300,000 operations min.

■ Operating Characteristics

Item	Standard-force Switches (B3W-9000)	High-force Switches (B3W-9002)
Operating force (OF)	1.57 N {160 gf} max.	2.26 N {230 gf} max.
Isolation	0.2 N {20 gf} min.	0.49 N {50 gf} min.
Isolation	$0.25^{+0.2}_{-0.1}$ mm	

LED Specifications

LED color	Red	Green	Green (high brightness)	Yellow	Blue
Maximum Forward current I_{FMAX}	27 mA	27 mA	27 mA	45 mA	27 mA
Recommended operating current I_F	20 mA	20 mA	10 mA	20 mA	10 mA
Forward voltage (typical value) V_F	1.8 V	2.1 V	3.7 V	2.4 V	3.7 V
Maximum reverse voltage V_R	5 V	5 V	5 V	5 V	5 V
Ambient operating temperature	-25°C to 70°C				

LEDs

■ Ambient Temperature vs Maximum Forward Current

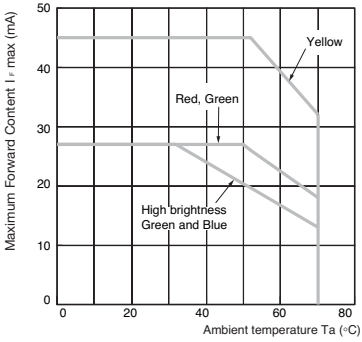

■ Forward Current vs Forward Voltage Curves (Condition: Ta = 25°C)

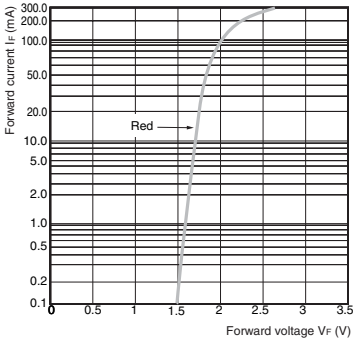

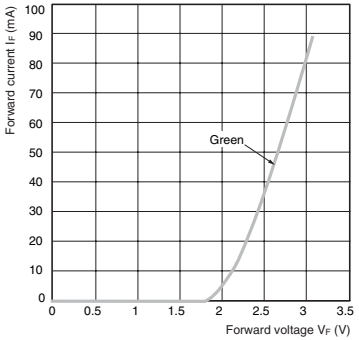

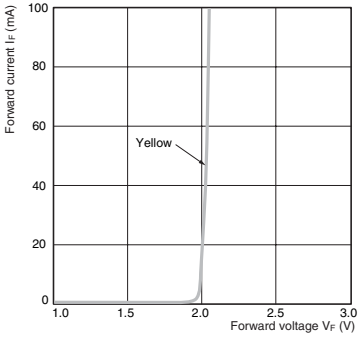

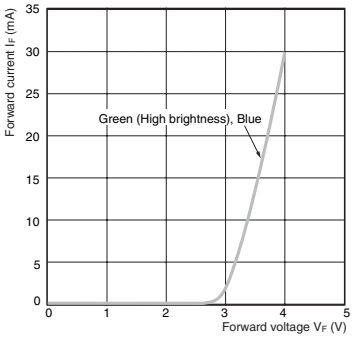

Note: **1.** Pay attention to the polarity of each LED. The anode and cathode can be identified by finding the cathode mark, as indicated on the Dimensions page.

2. Connect limiting resistors to the LEDs. The Switch does not have built-in limiting resistors, so satisfy the LED characteristics by obtaining the limiting resistance according to the following formula based on the voltage to be used.

$$\text{Limiting resistance (R)} = \frac{\text{(Voltage used (E) – LED forward voltage (VF))}}{\text{LED forward current (IF)}}\ (\Omega)$$

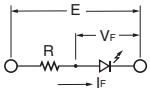

Dimensions

Note: All units are in millimeters unless otherwise indicated. Unless otherwise specified, a tolerance of ±0.4 mm applies to all dimensions.

■ 1 LED Types

B3W-900□–□1□

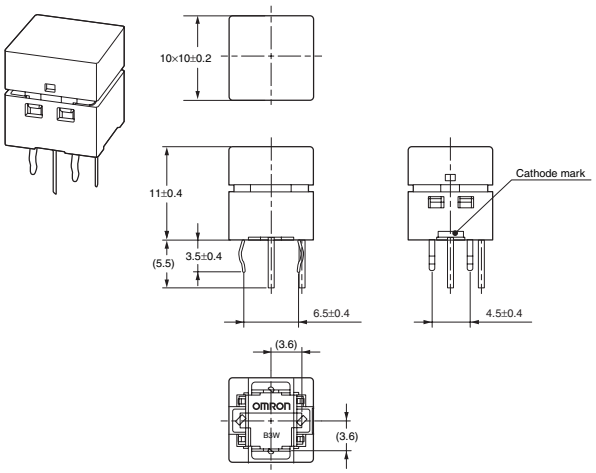

PCB Mounting (Top View)

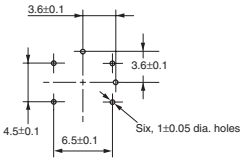

Terminal Arrangement/ Internal Connections (Top View)

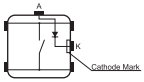

Note: If the poles of the LED are set incorrectly, it may result in malfunction.

■ 2 LED Types

B3W-900□–□2□

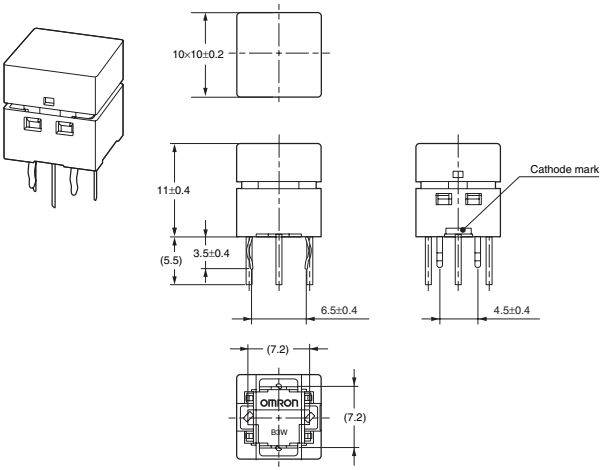

PCB Mounting (Top View)

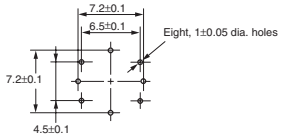

Terminal Arrangement/ Internal Connections (Top View)

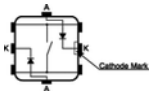

Note : If the poles of the LED are set incorrectly, it may result in malfunction.

Safety Precautions

■ Precautions for Correct Use

Electrical Standards

All Use the Switch within the rated voltage and current ranges, otherwise the Switch may have a shortened life expectancy, radiate heat, or burn out. This particularly applies to the instantaneous voltages and currents when switching.

Soldering

1. Soldering Precautions

- Before any kind of soldering, test to confirm that soldering can be performed properly. Otherwise the Switch may be deformed by the soldering heat depending on the type of PCB, pattern, or lands of the PCB.
- Do not solder the Switch more than twice, including rectification soldering. Wait for at least five minutes between the first and second soldering to allow the temperature to return to normal. Continuous soldering may cause the casing to melt or deteriorate the Switch characteristics.

2. Automatic Soldering Baths (Wave Soldering)

- Soldering temperature: 260°C max.
- Soldering time: 5 s max. for a 1.6-mm thick single-side PCB
- Preheating temperature: 100°C max. (ambient temperature)
- Preheating time: Within 60 s
- Precautions
  Make sure that no flux will rise above the level of the PCB.
  Also make sure that flux is not applied to the switch terminals or to the mounting surface of the PCB.
  If flux overflows onto the mounting surface of the PCB, it may enter the Switch and cause a malfunction.

3. Manual Soldering

- Soldering temperature: 350°C max. at the tip of the soldering iron
- Soldering time: 3 s max. for a 1.6-mm thick, single-side PCB
- Precautions: Before soldering the Switch on a PCB, make sure that there is no unnecessary space between the Switch and the PCB.

Washing

Since Illumination part and actuation part are not sealed, switch cannot be washed. Doing so will cause the washing agent, together with flux or dust particles on the PCB, to enter the Switch, resulting in malfunction.

PCBs

The Switch is designed for a 1.6-mm thick, single-side PCB. Using PCBs with a different thickness or using double-sided, through-hole PCBs may result in loose mounting, improper insertion, or poor heat resistance in soldering. These effects will occur, depending on the type of holes and patterns of the PCB. Therefore, it is recommended that a verification test is conducted before use.

Handling

1. Usage Environment

Before installing the Switch, make sure that the area of installation is not subject to corrosive gases emitted from surrounding parts.
Do not use in areas subject to high temperatures, high humidity, or toxic gases such as sulfuric gas (H_2S, SO_2), ammonia gas (NH_3), nitric gas (HNO_3), or chlorine gas (Cl_2). It can cause corrosive damage to the contacts and result in malfunction.
If there is silicon in the atmosphere, it may stop the contacts from functioning properly.
If silicon products, such as silicon oil, silicon filler, or silicon wires, are used in the surrounding area, install a contact protection circuit to prevent arching or remove the silicon source.
The following situations may cause water to enter inside the Switch, resulting in a malfunction due to contact failure or corrosion.

- Using the Switch in an outdoor environment where it is exposed to water drops for an extended period of time.
- Using the Switch in an underwater setting where it is subject to strong water pressure.

Do not use Switches that have been dropped. The mating section or other internal parts may be damaged, resulting in malfunction.

Operation

Do not repeatedly operate the Switch with excessive force. Applying excessive pressure or applying additional force after the plunger has stopped may deform the disk spring of the Switch, resulting in malfunction.
Be sure to set up the Switch so that the plunger will operate in a straight vertical line.
If the plunger is pressed off-center or from an angle it may cause deformation or damage to some parts. This may result in deterioration of durability or malfunction.

Dust Protection

Although the switching mechanism is a sealed structure (IP64), illumination part and actuation part is not sealed. Ensure you have the correct environmental conditions for instalation. Use a protective sheet or take other measures to protect against dust.

Sensitivity to Static Electricity

Switches with high-brightness green (HG) or blue (B) LEDs are susceptible to static electricity. Take care when handling switches with these LEDs as the LEDs may be damaged.

Storage Precautions

Storage Environment

To prevent degradation, such as discoloration, of the terminals during storage, do not store the Switch in locations that are subject to the following conditions.

1. High temperature or humidity
2. Corrosive gases
3. Direct sunlight

Storage condition

Store the Switches in the packaging box.
After the packaging box is opened, use the contents as quickly as possible. When storing leftover parts, make sure that appropriate measures are taken against humidity and corrosive gases.

Agreement of Product Use

Comply with the usage, storage, and disposal conditions specified by OMRON as outlined in the precautions in the product datasheet and specifications.

Omron Electronic Components Europe BV reserves the right to make any changes to the specifications of the products described at its sole discretion and without prior notice.

For full terms and conditions, visit our website www.omroncomponents.com and click on legal notices.

ALL DIMENSIONS SHOWN ARE IN MILLIMETRES.
To convert millimetres into inches, multiply by 0.03937. To convert grams into ounces, multiply by 0.03527.

CAT. No. A901-E2-01