Fastening Technology

BMS CS-M-D12-BZ
Order Code: BAM024T

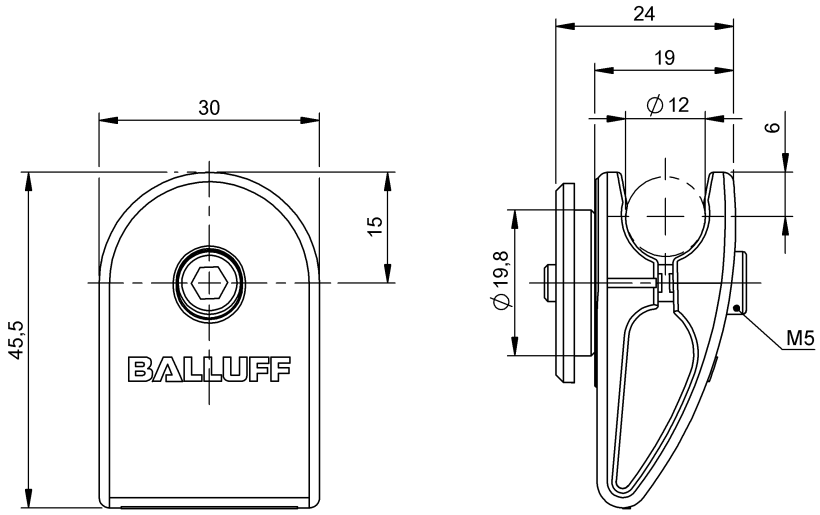

Basic features

Principle of operation	Mounting system
Scope of delivery	Screw ISO 4762-M5x22 Sensor bracket
Style	Sensor bracket
Use	for mounting system BMS for holding rods with Ø12 mm

Material

Housing material	Zinc, Die casting, chrome plated, matte
Surface protection	chrome plated, matte

Mechanical data

Dimension	45.5 x 24 x 30 mm
Mounting part	Screws, clamps
Tightening torque clamping screw	3.5 Nm