RoHS ✔

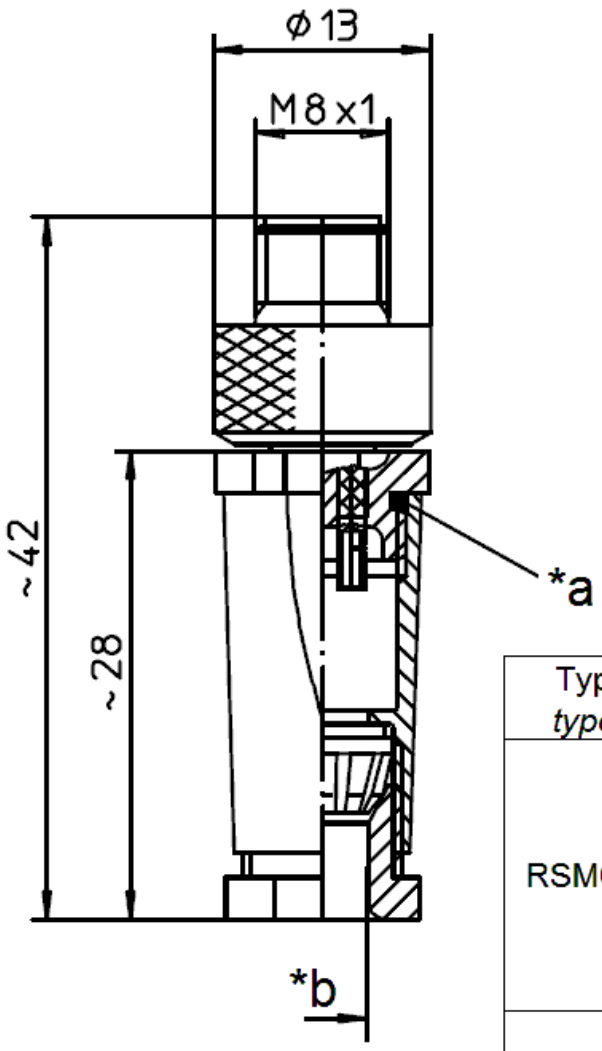



Typ/ *type*	Polzahl/ *number of poles*		Kabeldurchlass *b/ *cable outlet *b*
RSMC 3	3	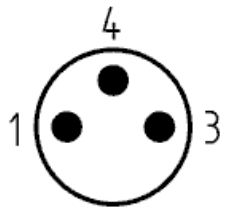	ø3,5 bis/ *to* 5,0 mm
RSMC 4	4		ø3,5 bis/ *to* 5,0 mm

Legende/ cutlinde
*a O-Ring/ *o-ring*

The information/details in this datasheet merely contain general descriptions or performance factors which, when applied in an actual situation, do not always correspond with the described form, and may be amended by way of the further development of products. The desired performance factors shall only be binding if these are expressly agreed on conclusion of the contract.

DIN ISO 5456-2

Product description

Description	M8 male connector, attachable - with threaded joint
Type	RSMC…, see last page(s)
Order No	see last page(s)
Type of contacts	female
Number of contacts	3,4- pins
Conductor size	max. 0,25 mm²
Type of contacts	soldering

Technical data

Rated voltage	3-pin 50 V AC / 60 V DC 4-pin 30 V AC/DC
Rated current *	4 A
Rated impulse voltage	0,9 kV
Pollution degree	3 acc. to DIN EN 60664-1 (VDE 0110-1)
Contact resistance	≤ 5 mOhm
Insulation resistance	> 10^9 Ohm

* Notice derating

Materials

Housing	PBT
Contact bearer	PA
Contact	CuSn
Contact plating	gold plated
Knurled screw	CuZn, nickel-plated
O-ring	FKM

Environmental conditions

Protection class (IEC 60529) *	IP67
Temperature range	-40°C to +85°C, notice derating

Good chemical resistance.
The resistance has to be checked in individual cases.

* only if mounted and locked in combination with Hirschmann / Lumberg connector.

Notes

Do not connect / disconnect under load.

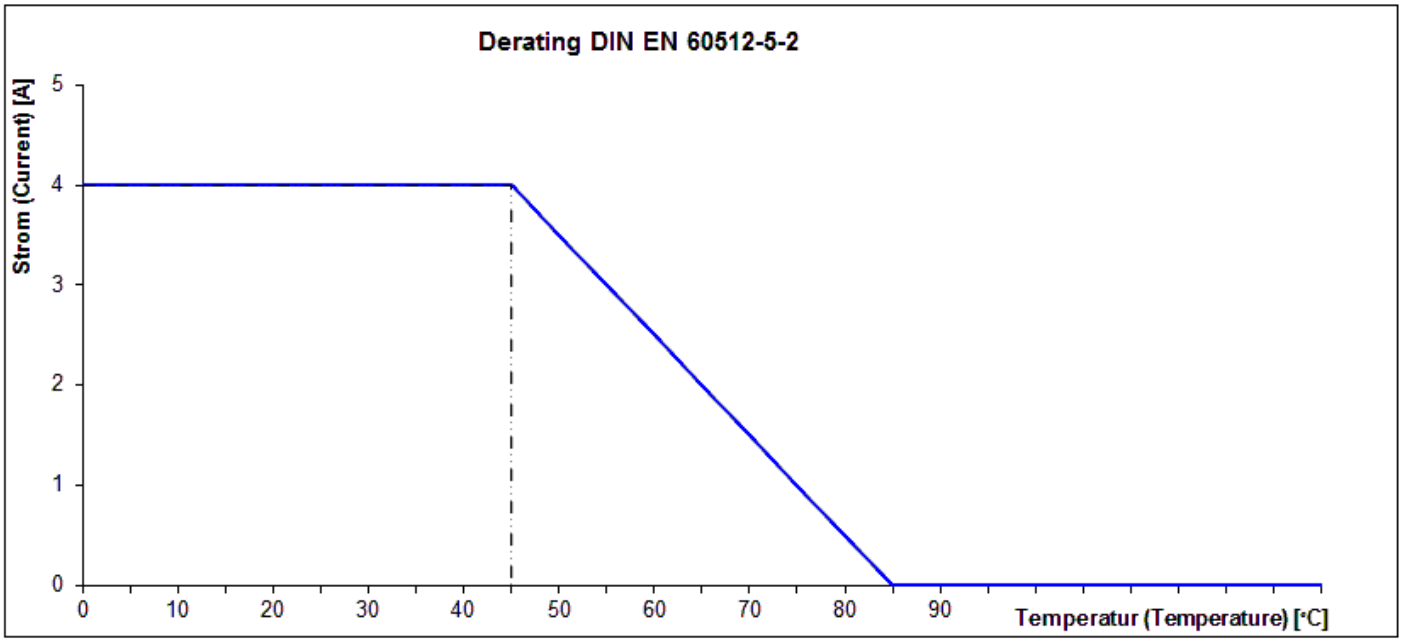

product overview

Article-No.	Type
000-011-652	RSMC 3
000-011-653	RSMC 4