# TS2789

## Temperature cable sensor with screw-in sensor

TS-PT100-SCREW-IN M5/2M PUR

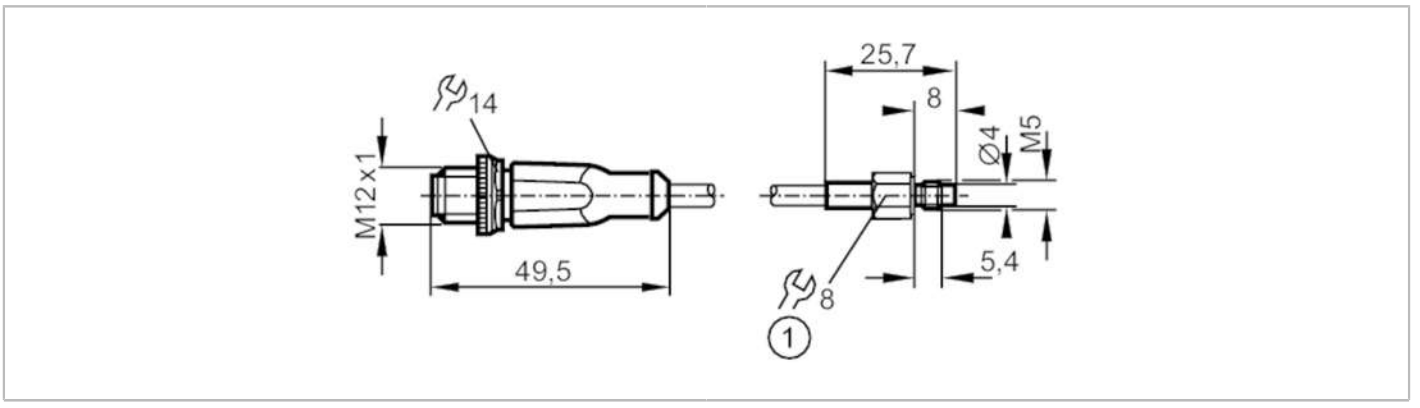


| | | | |
|---|---|---|---|
| **Product characteristics** | | | |
| Measuring range | | -40...90 °C | -40...194 °F |
| Process connection | | threaded connection M5 external thread | |
| **Application** | | | |
| Special feature | | Gold-plated contacts | |
| Measuring element | | 1 x Pt 100;  (to DIN EN 60751, class A) | |
| Installation | | surface mount RTD for solid bodies | |
| **Electrical data** | | | |
| Protection class | | III | |
| **Measuring/setting range** | | | |
| Measuring range | | -40...90 °C | -40...194 °F |
| **Accuracy / deviations** | | | |
| Accuracy | [K] | ± (0,15 K + 0,002 x\|t\|) | |
| **Response times** | | | |
| Dynamic response T05 / T09 | [s] | 3 / 8;  (to DIN EN 60751) | |
| **Operating conditions** | | | |
| Protection | | IP 67 | |
| **Tests / approvals** | | | |
| Shock resistance | | DIN EN 60068-2-27 | 50 g (11 ms) |
| Vibration resistance | | DIN EN 60068-2-6 | 10 g (10...2000 Hz) |
| MTTF | [years] | 11415.5 | |
| **Mechanical data** | | | |
| Weight | [g] | 80.95 | |
| Housing | | cylindrical | |
| Design | | screw-in sensor | |
| Materials | | stainless steel (316L/1.4404) | |
| Tightening torque | [Nm] | 1.5 | |
| Process connection | | threaded connection M5 external thread | |
| Probe diameter | [mm] | 4 | |
| **Remarks** | | | |
| Pack quantity | | 1 pcs. | |

# TS2789

## Temperature cable sensor with screw-in sensor

**TS-PT100-SCREW-IN M5/2M PUR**

## Electrical connection

Cable: 2 m, PUR

Connector: 1 x M12; coding: A; Contacts: gold-plated




### Connection

