PN7099
PN-1-1BRER14-QFRKG/US/ /V

Pressure sensors

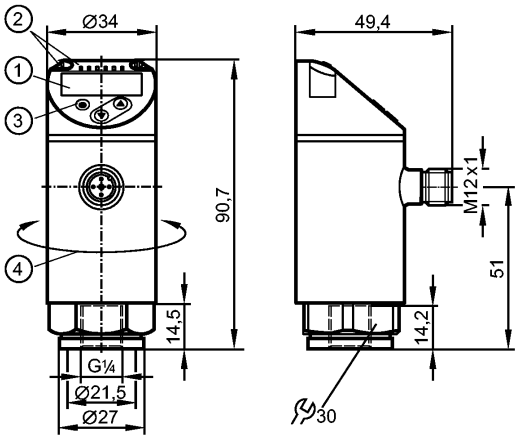

1: 4-digit alphanumeric display / alternating indication of red and green
2: LEDs (display unit / switching status)
3: Programming button
4: Upper part of the housing can be rotated by 345°

Product characteristics

Electronic pressure monitor	
M12 connector	
Function programmable	
Measuring element: ceramic-capacitive pressure measuring cell	
Process connection: G ¼ I	
2 outputs OUT1 = switching output OUT2 = switching output	
4-digit alphanumeric display / alternating indication of red and green	
Measuring range: -1000...1000 mbar / -14.5...14.5 psi / -100...100 kPa / -29.4...29.4 inHg	

Application

Application		Type of pressure: relative pressure Group 2 fluids according to the Pressure Equipment Directive (PED), group 1 fluids on request			
Pressure rating		20000 mbar	290 psi	2000 kPa	590 inHg
Bursting pressure min.		50000 mbar	725 psi	5000 kPa	1476 inHg
Medium temperature	[°C]	-25...80			

Electrical data

Electrical design		DC PNP/NPN
Operating voltage	[V]	18...30 DC [1])
Current consumption	[mA]	< 35
Insulation resistance	[MΩ]	> 100 (500 V DC)
Protection class		III
Reverse polarity protection		yes

Outputs

Output		2 outputs OUT1 = switching output OUT2 = switching output
Output function		2 x normally open / closed programmable
Current rating	[mA]	150; 200 (...60 °C); 250 (...40 °C)
Voltage drop	[V]	< 2.5
Short-circuit protection		pulsed
Overload protection		yes
Switching frequency	[Hz]	≤ 170

PN7099 - Electronic pressure monitor - eclass: 27201302 / 27-20-13-02

Measuring / setting range				
Measuring range	-1000...1000 mbar	-14.5...14.5 psi	-100...100 kPa	-29.4...29.4 inHg
Setting range				
Set point, SP	-980...1000 mbar	-14.3...14.5 psi	-98...100 kPa	-29...29.6 inHg
Reset point, rP	-990...990 mbar	-14.4...14.4 psi	-99...99 kPa	-29.2...29.4 inHg
in steps of	10 mbar	0.1 psi	1 kPa	0.2 inHg
Accuracy / deviations				
Accuracy / deviations (in % of the span)				
Switch point accuracy	< ± 0.5			
Characteristics deviation *)	< ± 0.25 (BFSL) / < ± 0.5 (LS)			
Hysteresis	< ± 0.25			
Repeatability **)	< ± 0.1			
Long-term stability ***)	< ± 0.05			
Temperature coefficients (TEMPCO) in the temperature range -25...80° C (in % of the span per 10 K)				
Greatest TEMPCO of the zero point	0.2			
Greatest TEMPCO of the span	0.2			
Reaction times				
Power-on delay time [s]	< 0.3			
Min. response time switching output [ms]	< 3			
Delay time programmable dS, dr [s]	0...50			
Integrated watchdog	yes			
Software / programming				
Programming options	hysteresis / window function; NO / NC; output polarity; on delay, off delay; damping; display unit			
Interfaces				
IO-Link device				
Transfer type	COM2 (38.4 kBaud)			
IO-Link revision	1.1			
SDCI standard	IEC 61131-9			
IO-Link device ID	406 d / 00 01 96 h			
Profiles	Smart Sensor: Process Data Variable; Device Identification, Device Diagnosis			
SIO mode	yes			
Required master port class	A			
Process data analogue	1			
Process data binary	2			
Min. process cycle time [ms]	2.3			
Environment				
Ambient temperature [°C]	-25...80			
Storage temperature [°C]	-40...100			
Protection	IP 65 / IP 67			
Tests / approvals				
Pressure equipment directive	Sound engineering practice			
EMC	DIN EN 61000-6-2 DIN EN 61000-6-3			
Shock resistance	DIN EN 60068-2-27	50 g (11 ms)		
Vibration resistance	DIN EN 60068-2-6	20 g (10...2000 Hz)		
MTTF [Years]	224.01			
UL approval number	J001			
Mechanical data				
Process connection	G ¼ I			
Materials (wetted parts)	1.4404; ceramics; FKM			
Housing materials	1.4404; PBT+PC-GF 30; PBT-GF 20; PC			
Switching cycles min.	100 million			
Tightening torque [Nm]	25...35 (recommended tightening torque²)			
Weight [kg]	0.235			
Displays / operating elements				

PN7099 - Electronic pressure monitor - eclass: 27201302 / 27-20-13-02

Display	Display unit 4 x LED green (bar, psi, kPa, inHg) Switching status 2 x LED yellow 4-digit alphanumeric display / alternating indication Measured values of red and green
Electrical connection	
Connection	M12 connector; Gold-plated contacts
Wiring	
Core colours BK black BN brown BU blue WH white	 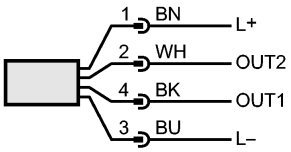 OUT1: switching output or IO-Link OUT2: switching output Colours to DIN EN 60947-5-2
Remarks	
Remarks	[1]) to EN50178, SELV, PELV *) BFSL = Best Fit Straight Line / LS = Limit Value Setting **) with temperature fluctuations < 10 K ***) in% of the span / 6 months [2]) Depends on lubrication, seal and pressure rating
Pack quantity [piece]	1