JUMO GmbH & Co. KG
Delivery address: Mackenrodtstraße 14
36039 Fulda, Germany
Postal address: 36035 Fulda, Germany
Phone: +49 661 6003-0
Fax: +49 661 6003-607
E-mail: mail@jumo.net
Internet: www.jumo.net

JUMO Instrument Co. Ltd.
JUMO House
Temple Bank, Riverway
Harlow, Essex CM20 2DY, UK
Phone: +44 1279 635533
Fax: +44 1279 635262
E-mail: sales@jumo.co.uk
Internet: www.jumo.co.uk

JUMO Process Control, Inc.
8 Technology Boulevard
Canastota, NY 13032, USA
Phone: 315-697-5866
1-800-554-JUMO
Fax: 315-697-5867
E-mail: info@jumo.us
Internet: www.jumo.us

JUMO frostTHERM-AT/-DR

Type 604100, Surface-mounted or DIN Rail Thermostat



JUMO frostTHERM-AT (STW)

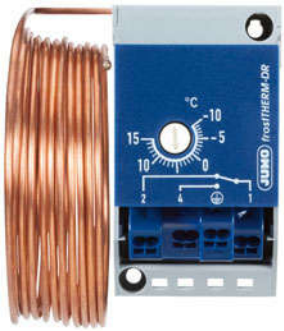

JUMO frostTHERM-DR (STW)

Special features

- PUSH IN connection technology • **reduced installation time by 50 %**
- Maximum switching capacity16 A, 230 V
- Protection type (AT) IP40 - IP65
  (DR) IP20

Brief description

The frost protection thermostat is used for temperature monitoring in ventilation and air conditioning systems to prevent damage caused by frost. It has a low switching differential and a high reproducibility. Reset occurs automatically (STW) or manually (STB).

High application flexibility and the latest connection technology are the essential equipment features of this thermostat series. The thermostat case is suitable for all common installation types such as wall, pipe, and DIN rail mounting. The JUMO frostTHERM-DR type is a specific variation with a special case bottom section for DIN rail or wall mounting. This allows easy mounting on mounting rails TH35 according to DIN EN 60715 (e.g. in control cabinets). This version considerably reduces the mounting time.

The "Push-In®" terminal technology allows the connection wires to be only inserted into the contact point up to the stop. No tool is required for connecting the wire or braid with the ferrule, thereby increasing safety during wiring. As a result, the costs and time required for connection is considerably reduced compared that of the conventional screw terminal.

The "Push-In®" terminal technology allows direct switching of loads up to 16 A at 230 V AC. The installation costs can be reduced further because a contactor is not required.

JUMO GmbH & Co. KG
Delivery address: Mackenrodtstraße 14
36039 Fulda, Germany
Postal address: 36035 Fulda, Germany
Phone: +49 661 6003-0
Fax: +49 661 6003-607
E-mail: mail@jumo.net
Internet: www.jumo.net

JUMO Instrument Co. Ltd.
JUMO House
Temple Bank, Riverway
Harlow, Essex CM20 2DY, UK
Phone: +44 1279 635533
Fax: +44 1279 635262
E-mail: sales@jumo.co.uk
Internet: www.jumo.co.uk

JUMO Process Control, Inc.
8 Technology Boulevard
Canastota, NY 13032, USA
Phone: 315-697-5866
1-800-554-JUMO
Fax: 315-697-5867
E-mail: info@jumo.us
Internet: www.jumo.us

Switching function

Safety temperature monitor STW	If the probe line falls below the entered setpoint value over a length of 15 cm with 3 m, 30 cm with 6 m, and 40 cm with 12 m, then electrical circuit 1-2 is opened while electrical circuit 1-4 is closed due to the changeover function. When the temperature rises, the microswitch is automatically switched back to its original position. If the measuring system is destroyed (i.e. if the expansion fluid escapes) the pressure in the diaphragm drops and permanently opens electrical circuit 1-2 and closes electrical circuit 1-4.
Safety temperature limiter STB	In the event of a temperature drop, the safety temperature limiter automatically locks and can only be unlocked manually once the temperature has risen again. If the measuring system is destroyed (i.e. if the expansion fluid escapes), the pressure in the diaphragm drops and permanently opens electrical circuit 1-2 and closes electrical circuit 1-4.

Technical data

	Type 5	**Type 7**
Case	Case bottom section:	PA (reinforced)
	Color:	Silver gray RAL 7001
	Case lid: ABS with inspection window (PMMA) Color: Cobalt blue RAL 5013	
Setpoint value adjustment STW, STB	The switching point can be adjusted with a screwdriver once the case lid has been removed. The set switching point can be checked through the inspection glass.	Switching point can adjusted with a screwdriver.
Protection class	IP 40 according to EN 60529 IP 65 according to EN 60529 (TZ 404)	IP 20 according to EN 60529
Electrical connection	Cable gland M 20 x 1.5, for cable ∅ 6-12 mm	Cable connection directly on PUSH IN terminals
Probe line-Ø	Approx. 2.4 mm (or 9.5 mm with 1.8 m capillary)	
Case mounting	Wall mounting / pipe mounting	Wall mounting, DIN rail installation TH35 according to DIN EN 60715
Weight	Approx. 0.2 kg	
Allowable storage temperature	-30 °C to +80 °C	
Allowable ambient conditions on the switching head	-20 °C to +80 °C The ambient temperature must exceed the switching point by +2 °C.	
Maximum allowable probe line temperature	120 °C	
Allowable minimum bending radius of the probe line	20 mm	

Electrical data

Electrical contact	Snap-action switch with single-pole changeover contact	
Switching capacity	STW	STB
	On the N/C contact (contact deck 1-2): AC 230 V +10 %, 16 (2.5) A, cos φ = 1 (0.6), DC 230 V +10 %, 0.25 A	On the N/C contact (contact deck 1-2): AC 230 V +10 %, 16 (2.5) A, cos = 1 (0.6), DC 230 V +10 %, 0.25 A
	On the N/O contact (contact deck 1-4): AC 230 V +10 %, 6.3 (2.5) A, cos φ = 1 (0.6), DC 230 V +10 %, 0.25 A	On the signal contact (contact deck 1-4): AC 230 V +10 %, 2 (04) A, cos = 1 (0.6), DC 230 V +10 %, 0.25 A
Electrical connection	PUSH IN contact (plug-type terminal) "Push-In®" terminal technology: Patented connection technology from Weidmüller GmbH & Co. KG, Detmold.	
Connection cross section	0.75 to 2.5 mm^2 finely stranded (single-wire, fine wired with ferrule)	
Switching reliability	To ensure high switching reliability, we recommend a minimum load of: AC / DC = 24 V, 100 mA with silver contacts	
Switching point accuracy	+/- 2 °C	
Switching differential	1.5 +/- 1 °C	

JUMO GmbH & Co. KG
Delivery address: Mackenrodtstraße 14
36039 Fulda, Germany
Postal address: 36035 Fulda, Germany
Phone: +49 661 6003-0
Fax: +49 661 6003-607
E-mail: mail@jumo.net
Internet: www.jumo.net

JUMO Instrument Co. Ltd.
JUMO House
Temple Bank, Riverway
Harlow, Essex CM20 2DY, UK
Phone: +44 1279 635533
Fax: +44 1279 635262
E-mail: sales@jumo.co.uk
Internet: www.jumo.co.uk

JUMO Process Control, Inc.
8 Technology Boulevard
Canastota, NY 13032, USA
Phone: 315-697-5866
1-800-554-JUMO
Fax: 315-697-5867
E-mail: info@jumo.us
Internet: www.jumo.us

Factory setting switching point	5 °C

Connection diagram

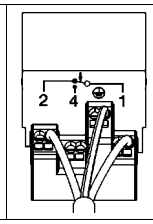

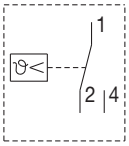

STW

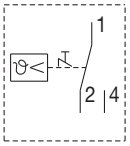

STB

The connection diagram included in the data sheet provides initial information about the connection options. Only use the installation instructions or the operating instructions for the electrical connection. The know-how and the correct technical implementation of the safety instructions/warnings contained in these documents are prerequisite for the installation, electrical connection, and startup as well as for safety during operation.

Dimensions

JUMO frostTHERM type 604100

JUMO frostTHERM-AT

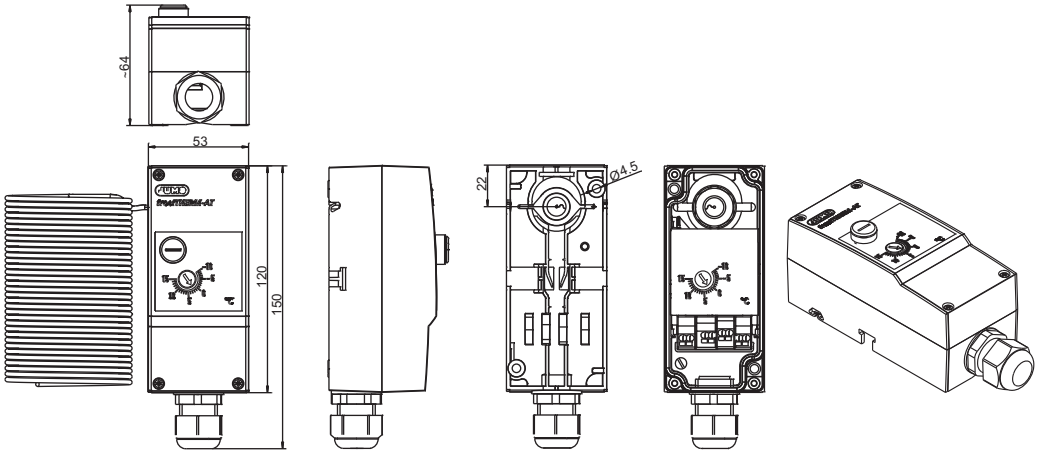

JUMO frostTHERM-DR

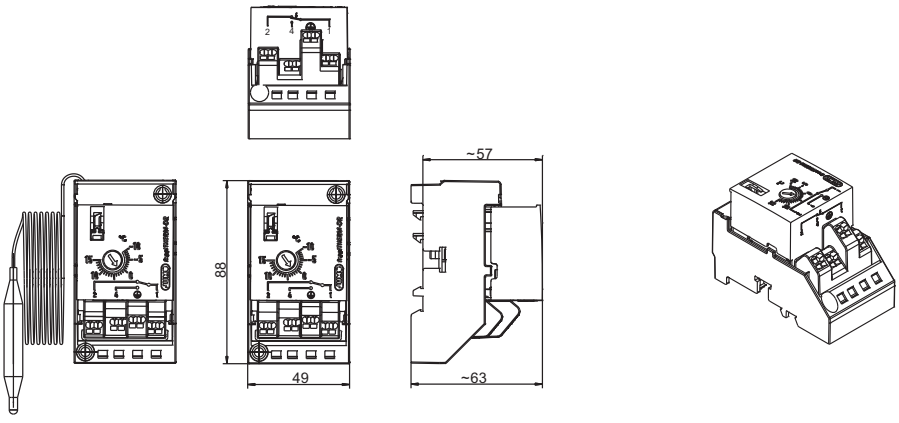

Accessories **(Data sheet 606710)**

Sales no.	Type	Material	
60/00558731 3 pieces	Holder	Polyamide, reinforced	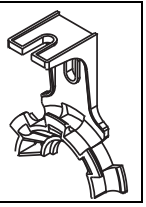
60/00558730 6 pieces			

JUMO GmbH & Co. KG
Delivery address: Mackenrodtstraße 14
36039 Fulda, Germany
Postal address: 36035 Fulda, Germany
Phone: +49 661 6003-0
Fax: +49 661 6003-607
E-mail: mail@jumo.net
Internet: www.jumo.net

JUMO Instrument Co. Ltd.
JUMO House
Temple Bank, Riverway
Harlow, Essex CM20 2DY, UK
Phone: +44 1279 635533
Fax: +44 1279 635262
E-mail: sales@jumo.co.uk
Internet: www.jumo.co.uk

JUMO Process Control, Inc.
8 Technology Boulevard
Canastota, NY 13032, USA
Phone: 315-697-5866
1-800-554-JUMO
Fax: 315-697-5867
E-mail: info@jumo.us
Internet: www.jumo.us

Order details

JUMO frostTHERM type 604100

Order code			
604100	**(1)**	**Basic type**	
		JUMO frostTHERM with single-pole snap-action switch	
	(2)	**Basic type extension**	
20		Safety temperature monitor (STW)	
70		Safety temperature limiter (STB)	
	(3)	**Type**	
5		Surface-mounted thermostat	
7		DIN rail thermostat	
	(4)	**Control / limit value range**	
140		-10 to +15	STW, STB
	(5)	**Probe line length**	
1800		1800 mm	Capillary with bulb probe
3000		3000 mm	
6000		6000 mm	
12000		12000 mm	
	(6)	**Probe diameter**	
0		Without	(for probe line)
9		∅ 9.5 mm	(for 1800 mm capillary with cartridge probe)
	(7)	**Probe material**	
40		Cu	Copper
	(8)	**Extra code**	
000		Without extra code	
404		Case protection class IP65	

Order code

(1)		(2)		(3)		(4)		(5)		(6)		(7)		(8)
604100	/		-		-		-		-		-		/	

Order example

604100	/	20	-	5	-	140	-	3000	-	0	-	40	/	404

Stock versions

Sales no.	Type	Control Range °C	Probe lead length	Protection class
60/60003347	JUMO frostTHERM-AT /20	-10 to +15	3000 mm	IP 40
60/60003348			6000 mm	
60/60003349			3000 mm	IP 65
60/60003350			6000 mm	