DATASHEET - LSM-20



Safety position switch, LS(M)-…, Rounded plunger, Basic device, expandable, 2 N/O, Yellow, Metal, Cage Clamp, -25 - +70 °C

Part no.	**LSM-20**
Catalog No.	**266155**
Alternate Catalog No.	**LSM-20**
EL-Nummer (Norway)	**4356156**

Delivery program

Basic function			Position switches
Part group reference			LS(M)-…
Product range			Rounded plunger
Degree of Protection			IP66, IP67
Features			Basic device, expandable
Ambient temperature		°C	-25 - +70
Contacts			
N/O = Normally open			2 N/O
Contact sequence			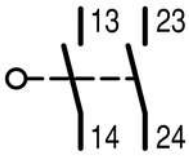
Contact travel ■ = Contact closed □ = Contact open			
Colour			
Enclosure covers			Yellow
Enclosure covers			
Housing			Metal
Connection type			Cage Clamp
Notes			Cage-Clamp is a registered trademark of Wago Kontakttechnik, 32432 Minden, Germany. Accessories for the Cage-Clamp terminals from Wago:power comb, gray, Wago Article No. 264-402

Technical data

General

Standards			IEC/EN 60947
Climatic proofing			Damp heat, constant, to IEC 60068-2-78; damp heat, cyclical, to IEC 60068-2-30
Ambient temperature		°C	-25 - +70
Mounting position			As required
Degree of Protection			IP66, IP67
Terminal capacities		mm^2	
Solid		mm^2	1 x (0.5 - 2.5)
Flexible with ferrule		mm^2	1 x (0.5 - 1.5)
Repetition accuracy		mm	0.15

Contacts/switching capacity

Rated impulse withstand voltage	U_{imp}	V AC	4000
Rated insulation voltage	U_i	V	400

Overvoltage category/pollution degree			III/3
Rated operational current	I_e	A	
AC-15			
24 V	I_e	A	6
220 V 230 V 240 V	I_e	A	6
380 V 400 V 415 V	I_e	A	4
DC-13			
24 V	I_e	A	3
110 V	I_e	A	0.6
220 V	I_e	A	0.3
Control circuit reliability			
at 24 V DC/5 mA	H_F	Fault probability	$< 10^{-7}$, < 1 fault in 10^7 operations
at 5 V DC/1 mA	H_F	Fault probability	$< 5 \times 10^{-6}$, < 1 failure at 5×10^6 operations
Supply frequency		Hz	max. 400
Short-circuit rating to IEC/EN 60947-5-1			
max. fuse		A gG/gL	6
Rated conditional short-circuit current		kA	1

Mechanical variables

Lifespan, mechanical	Operations	x 10^6	8
Contact temperature of roller head		°C	≦ 100
Mechanical shock resistance (half-sinusoidal shock, 20 ms)			
Standard-action contact		g	25
Operating frequency	Operations/h		≦ 6000

Actuation

Mechanical			
Actuating force at beginning/end of stroke		N	1.0/8.0
Actuating torque of rotary drives		Nm	0.2
Max. operating speed with DIN cam		m/s	1/0.5
Notes			for angle of actuation α = 0°/30°

Design verification as per IEC/EN 61439

Technical data for design verification			
Rated operational current for specified heat dissipation	I_n	A	6
Heat dissipation per pole, current-dependent	P_{vid}	W	0.17
Equipment heat dissipation, current-dependent	P_{vid}	W	0
Static heat dissipation, non-current-dependent	P_{vs}	W	0
Heat dissipation capacity	P_{diss}	W	0
Operating ambient temperature min.		°C	-25
Operating ambient temperature max.		°C	70
IEC/EN 61439 design verification			
10.2 Strength of materials and parts			
10.2.2 Corrosion resistance			Meets the product standard's requirements.
10.2.3.1 Verification of thermal stability of enclosures			Meets the product standard's requirements.
10.2.3.2 Verification of resistance of insulating materials to normal heat			Meets the product standard's requirements.
10.2.3.3 Verification of resistance of insulating materials to abnormal heat and fire due to internal electric effects			Meets the product standard's requirements.
10.2.4 Resistance to ultra-violet (UV) radiation			Meets the product standard's requirements.
10.2.5 Lifting			Does not apply, since the entire switchgear needs to be evaluated.
10.2.6 Mechanical impact			Does not apply, since the entire switchgear needs to be evaluated.
10.2.7 Inscriptions			Meets the product standard's requirements.
10.3 Degree of protection of ASSEMBLIES			Does not apply, since the entire switchgear needs to be evaluated.
10.4 Clearances and creepage distances			Meets the product standard's requirements.
10.5 Protection against electric shock			Does not apply, since the entire switchgear needs to be evaluated.
10.6 Incorporation of switching devices and components			Does not apply, since the entire switchgear needs to be evaluated.

10.7 Internal electrical circuits and connections			Is the panel builder's responsibility.
10.8 Connections for external conductors			Is the panel builder's responsibility.
10.9 Insulation properties			
10.9.2 Power-frequency electric strength			Is the panel builder's responsibility.
10.9.3 Impulse withstand voltage			Is the panel builder's responsibility.
10.9.4 Testing of enclosures made of insulating material			Is the panel builder's responsibility.
10.10 Temperature rise			The panel builder is responsible for the temperature rise calculation. Eaton will provide heat dissipation data for the devices.
10.11 Short-circuit rating			Is the panel builder's responsibility. The specifications for the switchgear must be observed.
10.12 Electromagnetic compatibility			Is the panel builder's responsibility. The specifications for the switchgear must be observed.
10.13 Mechanical function			The device meets the requirements, provided the information in the instruction leaflet (IL) is observed.

Technical data ETIM 7.0

Sensors (EG000026) / End switch (EC000030)		
Electric engineering, automation, process control engineering / Binary sensor technology, safety-related sensor technology / Position switch / Position switch (Type 1) (ecl@ss10.0.1-27-27-06-01 [AGZ382015])		
Width sensor	mm	31
Diameter sensor	mm	0
Height of sensor	mm	61
Length of sensor	mm	33.5
Rated operation current Ie at AC-15, 24 V	A	6
Rated operation current Ie at AC-15, 125 V	A	6
Rated operation current Ie at AC-15, 230 V	A	6
Rated operation current Ie at DC-13, 24 V	A	3
Rated operation current Ie at DC-13, 125 V	A	0.8
Rated operation current Ie at DC-13, 230 V	A	0.3
Switching function		Slow-action switch
Switching function latching		No
Output electronic		No
Forced opening		No
Number of safety auxiliary contacts		0
Number of contacts as normally closed contact		0
Number of contacts as normally open contact		2
Number of contacts as change-over contact		0
Type of interface		None
Type of interface for safety communication		None
Construction type housing		Cuboid
Material housing		Metal
Coating housing		Other
Type of control element		Plunger
Alignment of the control element		Other
Type of electric connection		Cable entry metrical
With status indication		No
Suitable for safety functions		No
Explosion safety category for gas		None
Explosion safety category for dust		None
Ambient temperature during operating	°C	25 - 70
Degree of protection (IP)		IP67
Degree of protection (NEMA)		4X

Approvals

Product Standards		IEC/EN 60947-5; UL 508; CSA-C22.2 No. 14; CE marking
UL File No.		E29184
UL Category Control No.		NKCR

CSA File No.	12528
CSA Class No.	3211-03
North America Certification	UL listed, CSA certified
Degree of Protection	IEC: IP66, 67, UL/CSA Type 3R, 4X (indoor use only), 12, 13

Dimensions

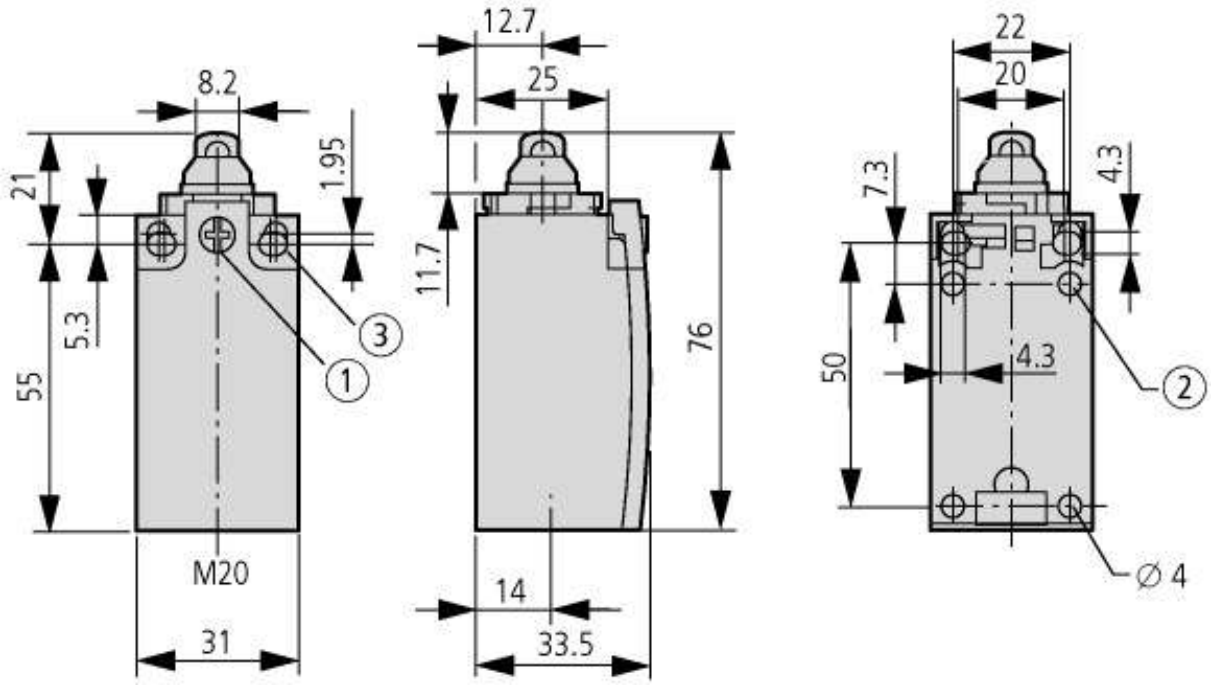

① Tightening torque of cover screws: 0.8 Nm ±0.2 Nm
② only with LS (insulated version)
③ Fixing screws 2 x M4 ≧ 30
M_A = 1.5 Nm

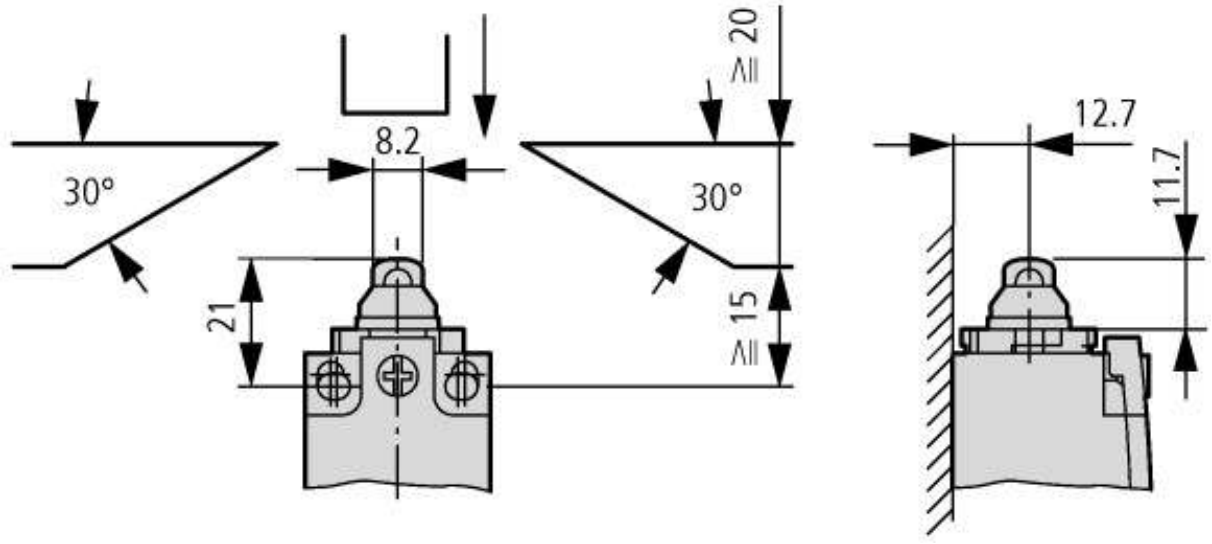

© 05/2021 by Eaton Industries GmbH