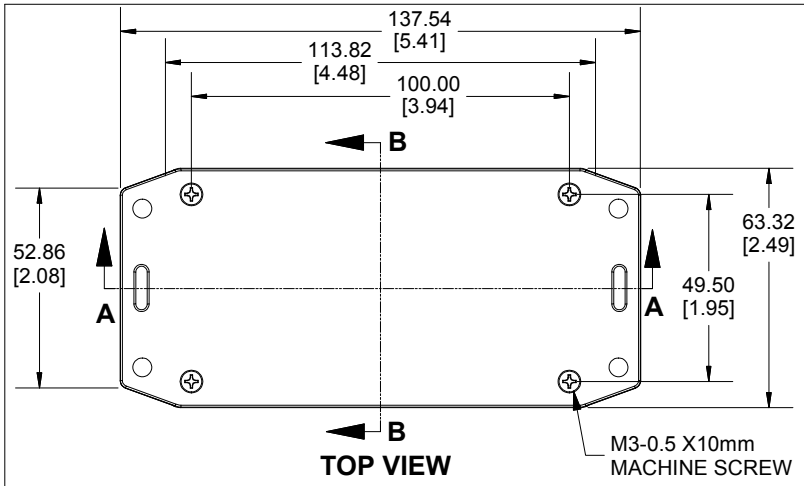

TOP VIEW

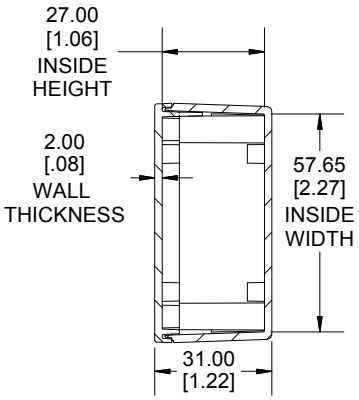

SECTION B-B
END VIEW



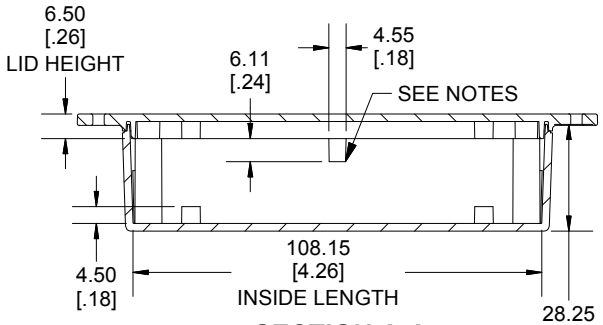

SECTION A-A
SIDE VIEW

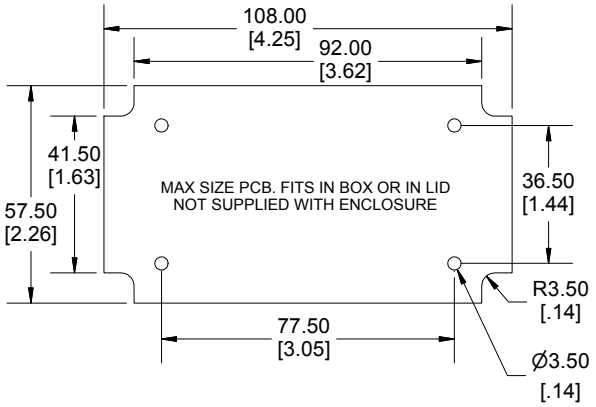

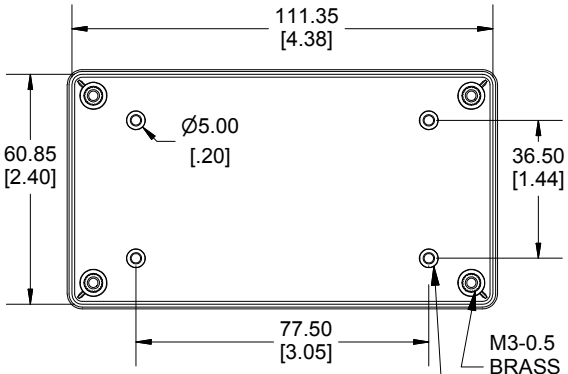

INSIDE BOX

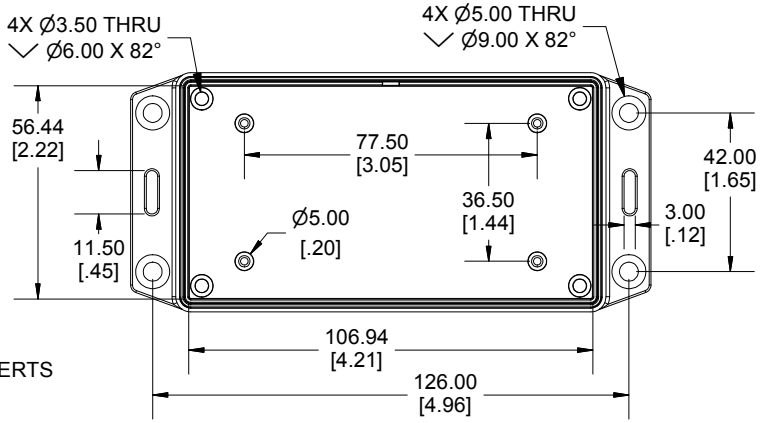

INSIDE LID

Dimensions:
mm
[inches]

Enclosures can be Factory Modified (Milling, Drilling, Printing etc.)
Contact Factory mjm@hammondmfg.com for quotes
Solid models of this enclosure available in STEP or IGES.
(Part number and text placement/orientation on our products are subject to change, we do not recommend using them as a locating reference for modification purposes)

NOTE
Tab dimensions show maximum size, tab may vary.
Purchased assembly includes box, lid, 4 cover screws and installed brass inserts. Enclosure molded from FRABS UL 94-V0 Plastic. Other materials / colours available consult factory.
Recommended Torque : (43-50) Ozf.in / (30-35) cN.m

PART NUMBERS	
1591XXBFL Enclosure	
Black Textured Enclosure	1591XXBFLBK
Gray Textured Enclosure	1591XXBFLGY
Translucent Blue Textured Enclosure	1591XXBFLTBU
ACCESSORIES	
Black Cover Screws [M3-0.5 X 10mm]	1591MS100BK (Pkg 100)
Plated Cover Screws [M3-0.5 X 10mm]	1591MS100 (Pkg 100)
P.C. Board Screws [#4 x 1/4" self-tapping (6.4mm)]	1593ATS50 (Pkg 50) 1593ATS100 (Pkg 100)

HAMMOND MANUFACTURING®

1591XXBFL

www.hammondmfg.com