# BFD6500A110

THREE-POLE CONTACTOR, 35A/1000V DC1, AC COIL, 110VAC 50/60HZ



| | | | |
|---|---|---|---|
| Product designation | | | Power contactor |
| Product type designation | | | BFD65 |
| **Contact characteristics** | | | |
| Number of poles | | Nr. | 3 |
| Rated insulation voltage Ui IEC/EN | | V | 1000 |
| Rated impulse withstand voltage Uimp | | kV | 8 |
| Operational frequency | | | |
| | min | Hz | 25 |
| | max | Hz | 400 |
| IEC Conventional free air thermal current Ith | | A | 115 |
| Operational current Ie | | | |
| | AC-1 (≤55°C) | A | 130 |
| IEC max current Ie in DC1 with L/R ≤ 1ms with 3 poles in series | | | |
| | 400V | A | 100 |
| | 600V | A | 75 |
| | 800V | A | 45 |
| | 1000V | A | 35 |
| Short-time allowable current for 10s (IEC/EN60947-1) | | A | 640 |
| Protection fuse | | | |
| | gG (IEC) | A | 125 |
| | aM (IEC) | A | 80 |
| Resistance per pole (average value) | | mΩ | 0.6 |
| Power dissipation per pole (average value) | | | |
| | Ith | W | 7.9 |
| Tightening torque for terminals | | | |
| | min | Nm | 4 |
| | max | Nm | 5 |
| | min | lbin | 2.95 |
| | max | lbin | 3.69 |
| Tightening torque for coil terminal | | | |
| | min | Nm | 0.8 |
| | max | Nm | 1 |
| | min | lbin | 0.8 |
| | max | lbin | 0.74 |
| Max number of wires simultaneously connectable | | Nr. | 2 |
| Conductor section | | | |
| AWG/Kcmil | | | |
| | max | | 2 |
| Flexible w/o lug conductor section | | | |
| | min | mm² | 1.5 |
| | max | mm² | 35 |
| Flexible c/w lug conductor section | | | |
| | min | mm² | 1.5 |
| | max | mm² | 35 |
| Power terminal protection according to IEC/EN 60529 | | | IP20 front |


The characteristics described in this document are subject to updates or modifications at any time. The descriptions, technical and functional information, illustrations and instructions in this brochure are purely illustrative, and are consequently not contractually binding

# BFD6500A110

THREE-POLE CONTACTOR, 35A/1000V DC1, AC COIL, 110VAC 50/60HZ

| | | | | |
|---|---|---|---|---|
| **Mechanical features** | | | | |
| Operating position | | | | |
| | | normal | | Vertical plan |
| | | allowable | | ±30° |
| Fixing | | | | Screw / DIN rail 35mm |
| Weight | | | g | 1240 |
| Conductor section | | | | |
| | AWG/kcmil conductor section | | | |
| | | max | | 2 |
| **Operations** | | | | |
| Mechanical life | | | cycles | 15000000 |
| **Safety related data** | | | | |
| Performance level B10d according to EN/ISO 13489-1 | | | | |
| | | mechanical load | cycles | 15000000 |
| EMC compatibility | | | | yes |
| **AC coil operating** | | | | |
| Rated AC voltage at 50/60Hz | | | V | 110 |
| AC operating voltage | | | | |
| | of 50/60Hz coil powered at 50Hz | | | |
| | | pick-up | | |
| | | | min | %Us 80 |
| | | | max | %Us 110 |
| | | drop-out | | |
| | | | min | %Us 20 |
| | | | max | %Us 55 |
| | of 50/60Hz coil powered at 60Hz | | | |
| | | pick-up | | |
| | | | min | %Us 85 |
| | | | max | %Us 110 |
| | | drop-out | | |
| | | | min | %Us 20 |
| | | | max | %Us 55 |
| AC average coil consumption at 20°C | | | | |
| | of 50/60Hz coil powered at 50Hz | | | |
| | | | in-rush | VA 210 |
| | | | holding | VA 15 |
| | of 50/60Hz coil powered at 60Hz | | | |
| | | | in-rush | VA 195 |
| | | | holding | VA 13 |
| | of 60Hz coil powered at 60Hz | | | |
| | | | in-rush | VA 210 |
| | | | holding | VA 15 |
| Dissipation at holding ≤20°C 50Hz | | | W | 5 |
| **Max cycles frequency** | | | | |
| Mechanical operation | | | cycles/h | 3600 |
| **Operating times** | | | | |
| Average time for Us control | | | | |
| | in AC | | | |
| | | Closing NO | | |
| | | | min | ms 12 |
| | | | max | ms 28 |
| | | Opening NO | | |
| | | | min | ms 8 |


The characteristics described in this document are subject to updates or modifications at any time. The descriptions, technical and functional information, illustrations and instructions in this brochure are purely illustrative, and are consequently not contractually binding

| | | | | | |
|---|---|---|---|---|---|
| | | | max | ms | 22 |
| | in DC | | | | |
| | | Closing NO | | | |
| | | | min | ms | 40 |
| | | | max | ms | 85 |
| | | Opening NO | | | |
| | | | min | ms | 20 |
| | | | max | ms | 55 |

## UL technical data

| | | | | | |
|---|---|---|---|---|---|
| General USE | | | | | |
| | Contactor | | | | |
| | | | AC current | A | 115 |
| | 4 poles in series DC1 | | | | |
| | | | 600V | A | 100 |

## Ambient conditions

| | | | | | |
|---|---|---|---|---|---|
| Temperature | | | | | |
| | Operating temperature | | | | |
| | | | min | °C | -50 |
| | | | max | °C | 70 |
| | Storage temperature | | | | |
| | | | min | °C | -60 |
| | | | max | °C | 80 |
| Max altitude | | | | m | 3000 |

## Resistance & Protection

| | |
|---|---|
| Pollution degree | 3 |

## Dimensions

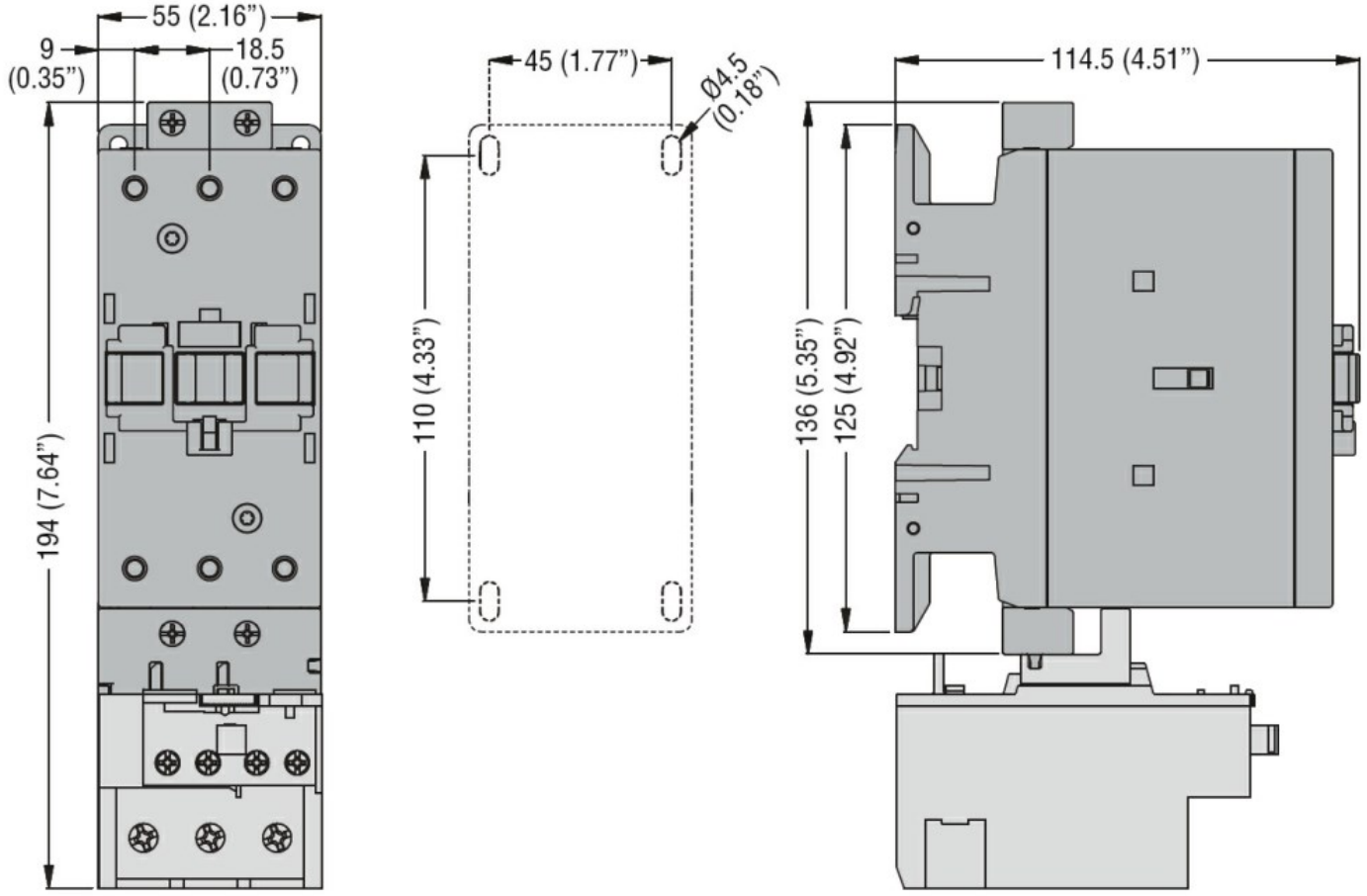


## Wiring diagrams


The characteristics described in this document are subject to updates or modifications at any time. The descriptions, technical and functional information, illustrations and instructions in this brochure are purely illustrative, and are consequently not contractually binding

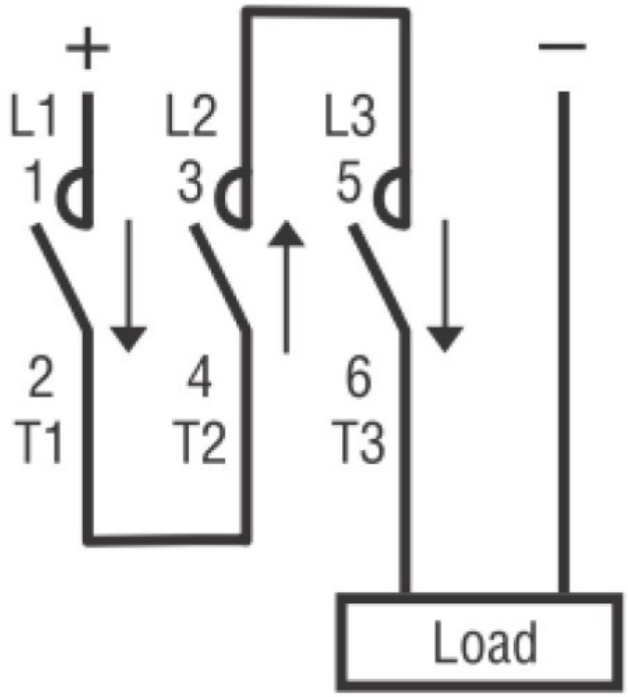


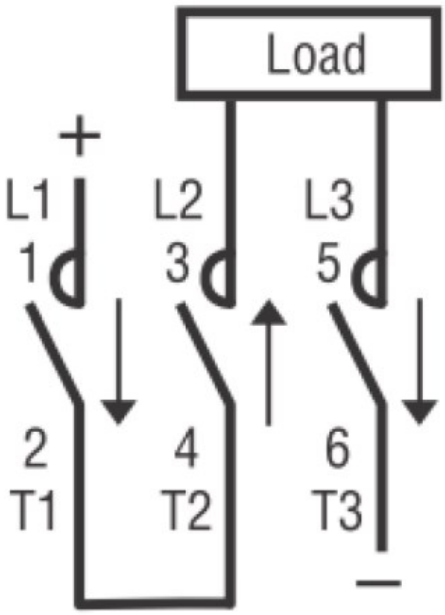


## Certifications and compliance

Compliance

| |
|---|
| CSA C22.2 n° 60947-1 |
| CSA C22.2 n° 60947-4-1 |
| IEC/EN/BS 60947-1 |
| IEC/EN/BS 60947-4-1 |
| UL 60947-1 |
| UL 60947-4-1 |

## ETIM classification

| | |
|---|---|
| ETIM 8.0 | EC002552 - Power contactor, DC switching |


The characteristics described in this document are subject to updates or modifications at any time. The descriptions, technical and functional information, illustrations and instructions in this brochure are purely illustrative, and are consequently not contractually binding