sedis
we make you stronger

MANUAL

EXTRACTEUR-9130 & EXTRACTEUR-9160

Chain extractor

for transmission chains

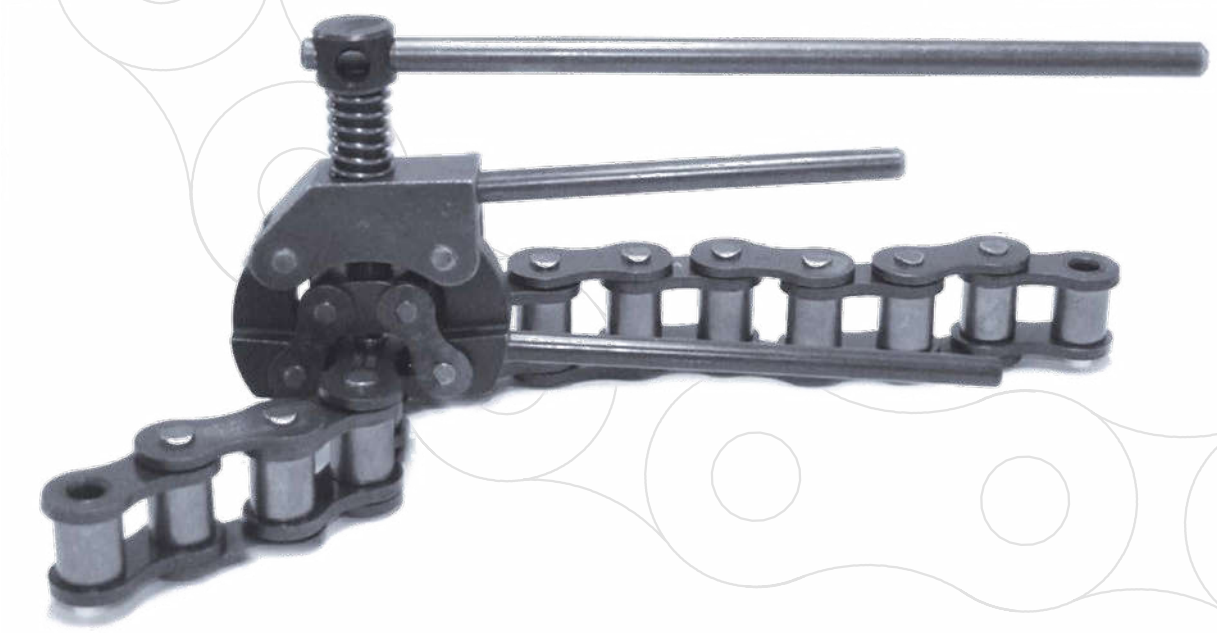

There are 2 references of extractors :

- **EXTRACTEUR-9130** for BS & ASA transmission chains (simplex, duplex & triplex) from 8mm to 19,05mm pitches.
- **EXTRACTEUR-9160** for BS & ASA transmission chains (simplex, duplex & triplex) of 25,4mm pitch.

SEDIS • 6 RUE NICOLAS SIRET • CS 90104 • 10003 TROYES CEDEX • FRANCE
TEL : +33 (0)3 25 76 29 50 • EMAIL: HTTPS://SEDIS.COM/CONTACT • WWW.SEDIS.COM

International Organization for Standardization ISO 9001

MANUAL - EXTRACTEUR-9130 & 9160

Chain extractors

we make you stronger

INSTRUCTIONS

PRECAUTIONS & RECOMMENDATIONS :

- In order to facilitate the dismantling of the link, it is recommended to grind the pins ; this operation is not necessary with a DELTA® chain (easy extractible pins).
- It is a destructive process : the dismantled link will not be reusable.

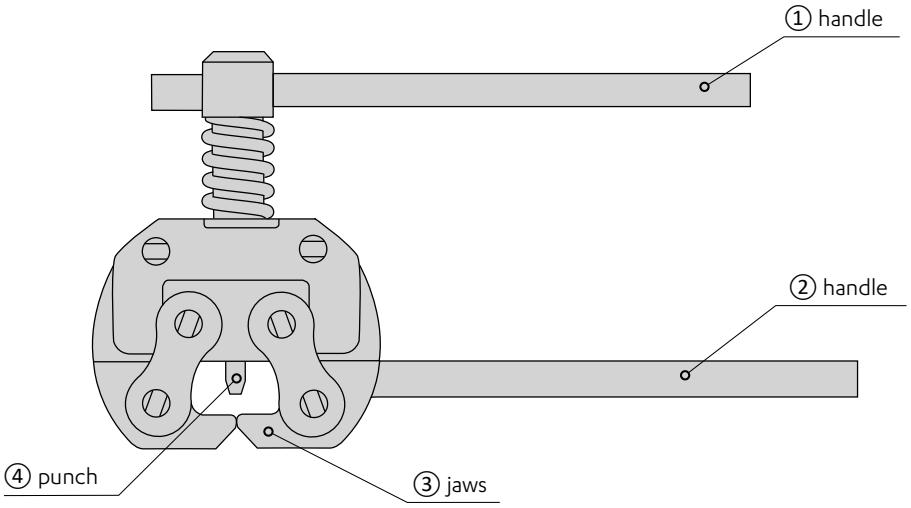

1 By tightening the handles ① & ②, place the extractor on the chain to open, so the jaws ③ would be under the inner plate, and the punch ④ would be on the center of the pin to extract.



2 Start screwing slowly by turning the handle ① to push the first pin. When it is slightly pushed down, proceed in the same manner on the second pin of the outer plate. Continue proceeding this way and alternaly on each pin of the link to remove.



CAUTION : Do not punch the same pin out in one shot, it could twist the link.

3 Once the two pins are pushed enough, remove the upper outer plate and then the bottom one which includes the two pins.
The link is now removed and the chain is opened.

