SR0153

Control monitor for flow sensors

VS3000/24VDC

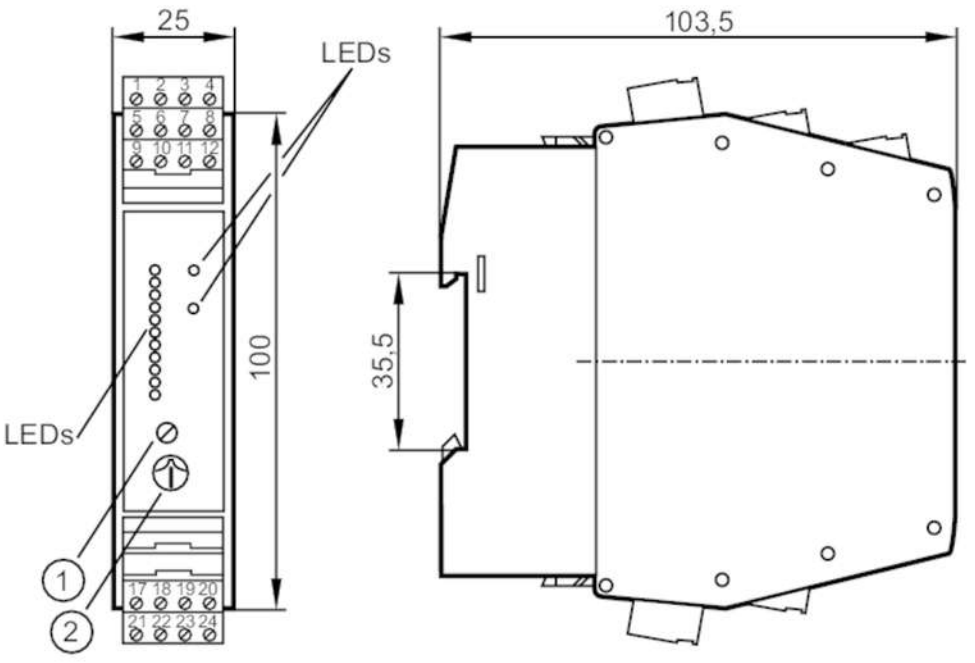

1 potentiometer (switch point flow)
2 potentiometer (switch point temperature)

Application		
Application		Flow monitoring; Temperature monitoring; Wire monitoring
Electrical data		
Operating voltage tolerance	[%]	-10...10
Operating voltage	[V]	24 DC
Current consumption	[mA]	90
Protection class		III
Reverse polarity protection		no
Power-on delay time	[s]	10...80; (adjustable (fixed-value resistors terminals 22-23))
Number of channels		1
Outputs		
Performance in case of a fault		In case of undervoltage all relays are de-energised; the LED "LOW VOLTAGE/WIRE BREAK-RELAY" lights
Electrical design		relay
Contact rating		4 A (250 V AC / 30 V DC)
Switching function flow monitoring		relay energised when flow is present and during the power-on delay time
Switching function temperature monitoring		relay de-energised when temperature is exceeded
Switching function wire break monitoring		relay de-energised in case of wire break or short circuit
Short-circuit proof		no
Overload protection		no

SR0153

Control monitor for flow sensors

VS3000/24VDC

Response times		
Response time	[s]	< 3
Software / programming		
Adjustment of the switch point		potentiometer
Selection liquids / gases		wire bridge; on delivery: monitoring of liquids.; for monitoring of gases: link terminals 23 / 24.
Switch point setting		potentiometer
Temperature range	[°C]	0...80
Repeatability of the set switch point	[K]	4
Operating conditions		
Ambient temperature	[°C]	-20...60
Note on ambient temperature		in case of sufficient free space for convection cooling
Protection		IP 20
Tests / approvals		
MTTF	[years]	263
Mechanical data		
Weight	[g]	233
Housing		housing for DIN rail mounting
Dimensions	[mm]	100 x 25 x 103.5
Materials		PBT
Displays / operating elements		
Display	function	11 x LED
	switching status	LED, red
	switching status	LED, red
Electrical connection		
Required protection		miniature fuse to IEC60127-2 sheet 1; ≤ 5 A; fast acting
Remarks		
Remarks		Recommendation Check the safe functioning of the unit after a short circuit.
Pack quantity		1 pcs.

SR0153

Control monitor for flow sensors

VS3000/24VDC

Electrical connection

COMBICON connector:

Connection

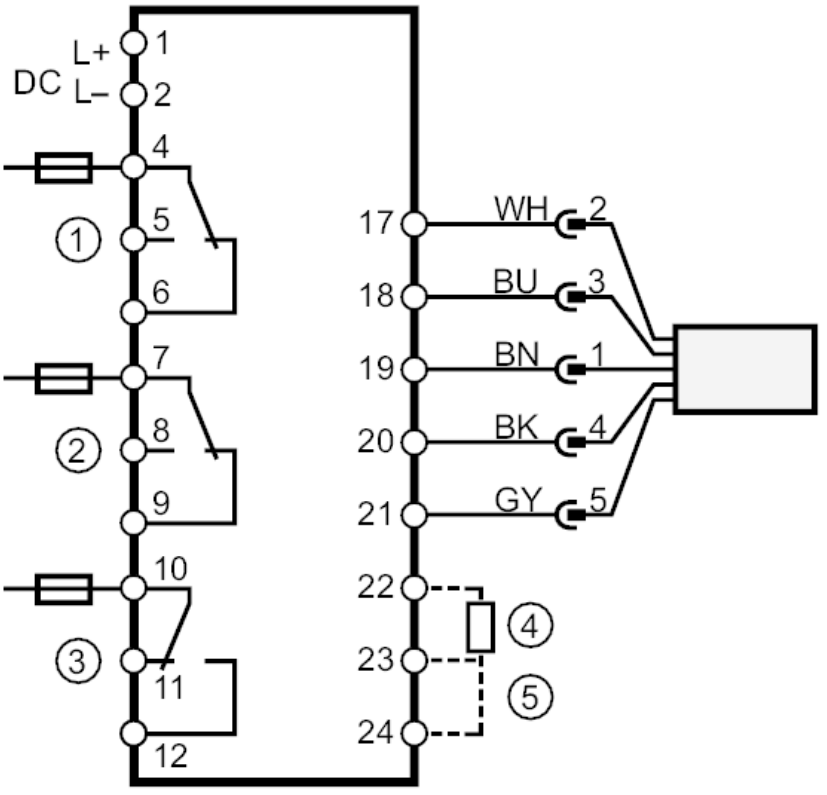

1 =	Flow monitoring
2 =	Wire monitoring
3 =	Temperature monitoring
4 =	Power-on delay time
5 =	selection liquid/gas
Note	miniature fuse to IEC60127-2 sheet 1 ≤ 5 A fast acting
	Core colours :
BN =	brown
BU =	blue
BK =	black
WH =	white
GY =	grey