RO3102

Incremental encoder with hollow shaft

INCREMENTAL ENCODER BASIC LINE

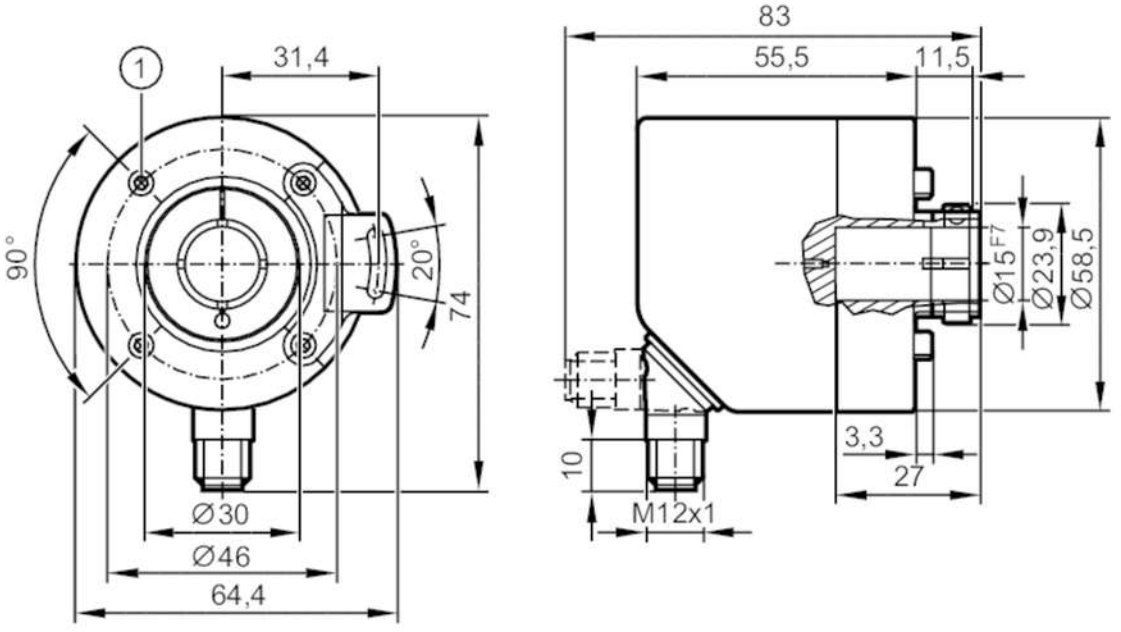

1 M3 x 0.5 Depth 6 mm

Product characteristics		
Resolution		1...10000; (parameterisable; Factory setting: 1024) resolution
Communication interface		IO-Link
Shaft design		hollow shaft open to one side
Shaft diameter	[mm]	15
Application		
Function principle		incremental
Detection system		magnetic
Electrical data		
Operating voltage	[V]	4.75...30 DC
Current consumption	[mA]	< 150
Protection class		III
Reverse polarity protection		yes
Power-on delay time	[s]	0.5
Max. revolution electrical	[U/min]	12000
Outputs		
Electrical design		HTL/TTL
Switching frequency	[kHz]	1000
Factory setting		Output function: HTL (50 mA)
Short-circuit protection		yes
Phase difference A and B	[°]	90
Measuring/setting range		
Resolution		1...10000; (parameterisable; Factory setting: 1024) resolution

RO3102

Incremental encoder with hollow shaft

INCREMENTAL ENCODER BASIC LINE

Accuracy / deviations		
Accuracy	[°]	0.1
Software / programming		
Parameter setting options		Resolution; direction of rotation; HTL; TTL
Interfaces		
Communication interface		IO-Link
Transmission type		COM2 (38,4 kBaud)
IO-Link revision		1.1
SIO mode		yes
Min. process cycle time	[ms]	2.3
Operating conditions		
Ambient temperature	[°C]	-40...85
Storage temperature	[°C]	-40...85
Max. relative air humidity	[%]	95; (condensation not permissible)
Protection		IP 65; IP 66; (on the housing: IP 67; on the shaft: IP 65)
Tests / approvals		
Shock resistance		100 g
Vibration resistance		20 g
MTTF	[years]	292
Mechanical data		
Weight	[g]	415.5
Dimensions	[mm]	Ø 58.5 / L = 69
Materials		flange: aluminium; housing: stainless steel (444/1.4521)
Tightening torque	[Nm]	< 0.7; (Mounting screw)
Max. revolution, mechanical	[U/min]	12000
Max. starting torque	[Nm]	2
Reference temperature torque	[°C]	20
Shaft design		hollow shaft open to one side
Shaft diameter	[mm]	15
Shaft material		stainless steel
Installation depth of shaft	[mm]	27
Max. axial shaft misalignment	[mm]	0,5
Fixing flange		Ø 58.5 mm

Electrical connection

Connector: 1 x M12, radial, can also be used axially; coding: A; Moulded body: stainless steel (316 / 1.4401); Maximum cable length: 100 m; (IO-Link: max. 20 m)

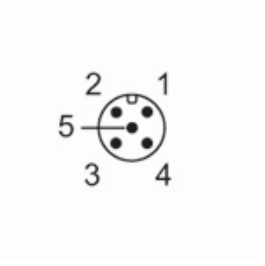

RO3102

Incremental encoder with hollow shaft

INCREMENTAL ENCODER BASIC LINE

IO-Link	
1	L+
2	not to be used
3	L-
4	IO-Link
5	not to be used
Screen	plug

encoder	
1	UB
2	A
3	GND
4	Z/0-Pulse (90 deg)
5	B
Screen	plug

Diagrams and graphs

Pulse diagram

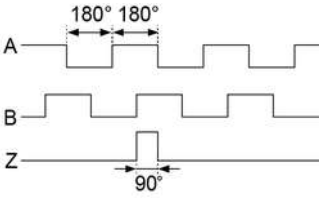

direction of rotation clockwise (looking at the shaft)