E43406

IO-Link data splitter

IO-LINK DATA SPLITTER PNP

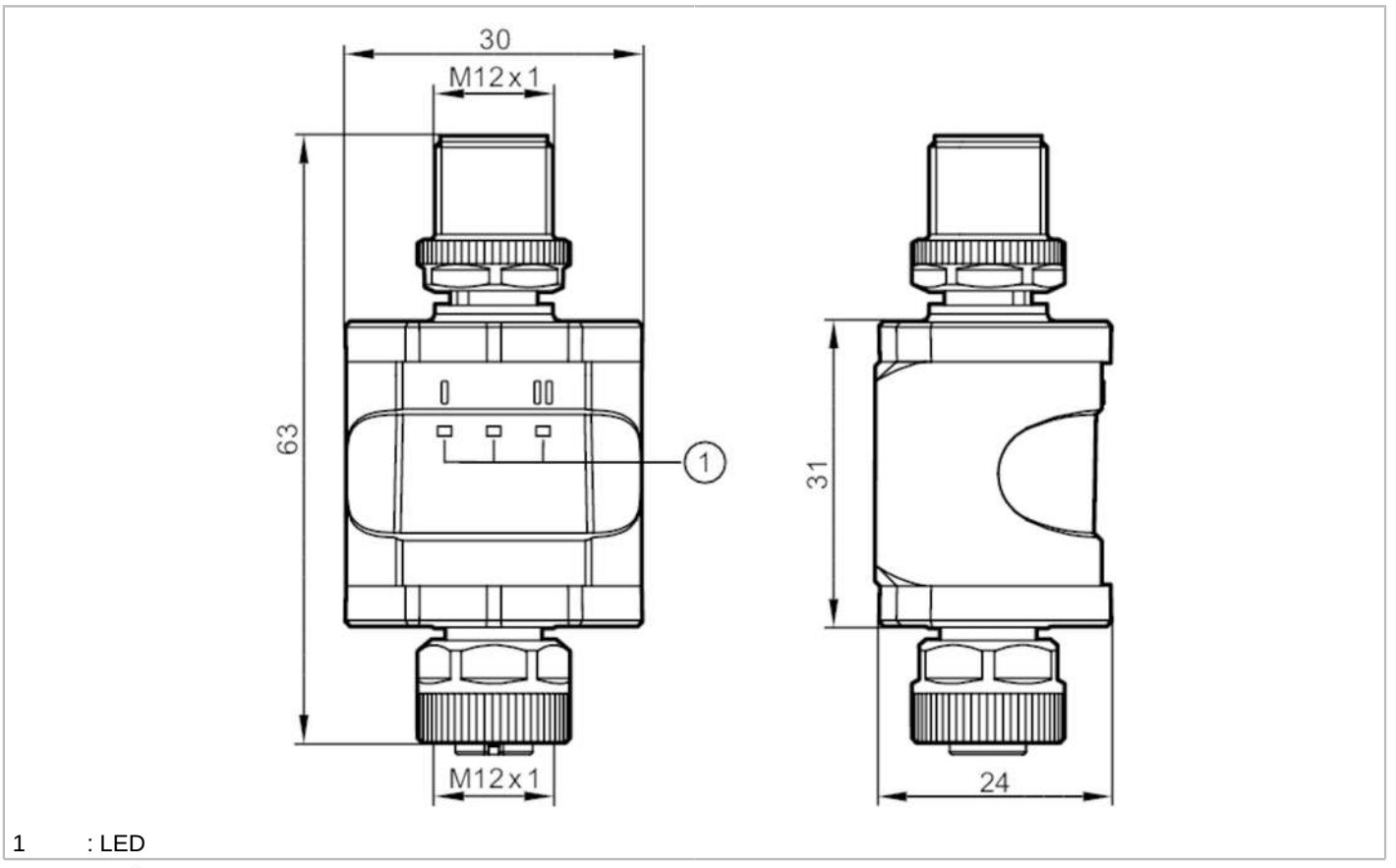

1 : LED

Product characteristics		
Number of inputs and outputs		Number of digital outputs: 1
Application		
Special feature		Gold-plated contacts
Application		for retrofitting of existing IO-Link systems; for systems without IO-Link capabilities
Electrical data		
Operating voltage	[V]	18...30 DC; (on the master side; on the controller / system: 20...30 DC)
Nominal voltage DC	[V]	24
Current consumption	[mA]	< 17; (both sides)
Protection class		III
Reverse polarity protection		yes; (on the master side)
Power-on delay time	[s]	< 2; (for communication; response time switching signal: response time device plus IO-Link process cycle time)
Inputs / outputs		
Total number of inputs and outputs		1; (on the controller / system)
Number of inputs and outputs		Number of digital outputs: 1
Outputs		
Output signal		switching signal; IO-Link
Electrical design		PNP
Number of digital outputs		1

E43406

IO-Link data splitter

IO-LINK DATA SPLITTER PNP

Output function		normally open / normally closed	
Max. voltage drop switching output DC	[V]	2.5	
Permanent current rating of switching output DC	[mA]	200	
Type of short-circuit protection		pulsed	
Short-circuit proof		yes	
Overload protection		yes	
Interfaces			
Communication interface		IO-Link	
Supported DeviceIDs		**Type of operation**	**DeviceID**
		IO-Link Device	1107
IO-Link Device			
Note on interfaces		connection to IO-Link masters	
Transmission type		COM2 (38,4 kBaud)	
IO-Link revision		1.1	
SDCI standard		IEC 61131-9	
Profiles		Common - I&D	Identification and Diagnosis
SIO mode		yes	
Required master port type		A	
Min. process cycle time	[ms]	4.2	
IO-Link Master			
Note on interfaces		connection to IO-Link devices	
Unterstützte Masterportklasse		A / B	
Transmission type		COM1 (4,8 kBaud); COM2 (38,4 kBaud); COM3 (230,4 kBaud)	
IO-Link revision		1.0; 1.1	
SDCI standard		IEC 61131-9	
Operating conditions			
Ambient temperature	[°C]	-25...60	
Storage temperature	[°C]	-25...70	
Protection		IP 67	
Tests / approvals			
EMC		DIN EN 61000-6-2	
		DIN EN 61000-6-4	in plastic or open metal tanks
Shock resistance		DIN EN 60068-2-27	15 g (6 ms)
Vibration resistance		DIN EN 60068-2-6	2 g (10...150 Hz)
MTTF	[years]	307	
UL approval		Ta	max. 55 °C
		File number UL	E205959
Mechanical data			
Weight	[g]	90	
Materials		stainless steel (316L/1.4404); brass (2.0401); PBT; PA; Sealing: FKM;	

E43406

IO-Link data splitter

IO-LINK DATA SPLITTER PNP

Displays / operating elements		
Display	switching output	1 x LED, yellow
	operation	1 x LED, green
	IO-Link	1 x LED, yellow

Accessories	
Accessory required	Y connection cable 1, EVC843

Remarks	
Remarks	For information on the maximum cable length please refer to the operating instructions.
	To ensure the function according to technical datasheet and operating instructions the use of the following article is imperative: EVC843
	the device complies with overvoltage category II
Pack quantity	1 pcs.

Electrical connection

Electrical connection - plug

Connector: 1 x M12; coding: A; Contacts: gold-plated



1	L+
2	NC
3	L-
4	C: IO-Link

Electrical connection - socket

Connector: 1 x M12; coding: A; Contacts: gold-plated

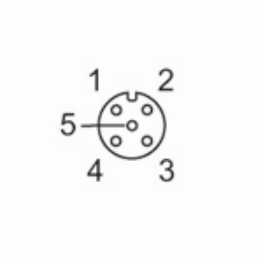

1	L+
2	C/Q: IO-Link Master
3	L-
4	OUT1: switching output or IO-Link
5	NC

E43406

IO-Link data splitter

IO-LINK DATA SPLITTER PNP

Electrical connection

Connection

