Capacitive Hygro-Thermo-Transmitter with intelligent and exchangeable sensors



B 90.7027.1

Operating Instructions

JUMO

02.08/00505282

USA

FCC notice:

This equipment has been tested and found to comply with the limits for a Class B digital device, pursuant to part 15 of the FCC Rules. These limits are designed to provide reasonable protection against harmful interference in a residential installation. This equipment generates, uses and can radiate radio frequency energy and, if not installed and used in accordance with the installation manual, may cause harmful interference to radio communications. However, there is no guarantee that interference will not occur in a particular installation. If this equipment does cause harmful interference to radio or television reception, which can be determined by turning the equipment off and on, the user is encouraged to try to correct the interference by one or more of the following measures:

- Reorient or relocate the receiving antenna.
- Increase the separation between the equipment and receiver.
- Connect the equipment into an outlet on a circuit different from that to which the receiver is connected.
- Consult the dealer or an experienced radio/TV technician for help.

Caution:

Any changes or modifications not expressly approved by the party responsible for compliance could void the user's authority to operate this device.

CANADIAN

ICES-003 notification:

This Device B digital apparatus complies with Canadian ICES-003.

Contents

1 General 4

1.1 Symbol assertion 4
1.2 General safety instructions 4

2 Product description 4

3 Installation 5

3.1 Mounting of metal housing 5
3.2 Mounting of sensors 5

4 Electrical connections 6

5 Operating components 7

5.1 Circuit board 7
5.2 Display 7

6 Humidity-/temperature calibration 8

6.1 2-point humidity calibration/2-point temperature calibration 8
6.2 1-point humidity calibration/1-point temperature calibration 9
6.3 Resetting to factory calibration 9

7 Maintenance 10

7.1 Replacement of sensor 10
7.2 Self-help in case of errors 10

8 Replacement/Accessories 10

9 Technical data 11

Appendix 12

Instructions for display change 12
Application note for reference sensors 13

1. GENERAL

The manual is a part of the scope of supply and serves to ensure proper handling and optimum functioning of the instrument.
JUMO doesn't accept warranty and liability claims neither upon this publication nor in case of improper treatment of the described products.
For this reason, the manual must be read before start-up.
In addition, the manual is for all personnel who require knowledge concerning transport, setup, operation, maintenance and repair.
The manual must not be used for the purpose of competition without a written consent from JUMO and must also not be forwarded to third parties.
Copies for personal use are permitted.

The document may contain technical inaccuracies and typographical errors. The content will be revised on a regular basis. These changes will be implemented in later versions. The described products can be improved and changed at any time without prior notice.

© Copyright JUMO **All rights reserved.**

1.1 Symbol assertion

This symbol indicates a safety instruction.
These safety instructions should always be followed carefully.
By not following these instructions injuries of persons or material damage could happen.
Therefore JUMO does not accept liability.

This symbol indicates a note.
These notes should be observed to achieve optimum functioning of the equipment.

1.2 General Safety Instructions

- Excessive mechanical loads and incorrect usage should always be avoided.
- Take care when unscrewing the filter cap as the sensor element could be damaged.
- The sensor is an Electro Static Discharge sensitive component (ESD). When touching the sensor element, ESD protective measures should be followed.
- Installation, electrical connection, maintenance and commissioning should be performed by qualified personnel only.

2. PRODUCT DESCRIPTION

Specific for the 90.7027 series are the interchangeable sensors with connector.
The series also stands for multifunctionality, highest accuracy, easy mounting and service.

Following models are available:

- Model for wall mounting
- Model for wall mounting with rear cable outlet.

Due to its versatility e.g. sensor cable for remote sensor, display, etc. the transmitter can be utilised in many different applications.

The construction of the transmitter makes field and local loop calibration an easy task.

3. INSTALLATION

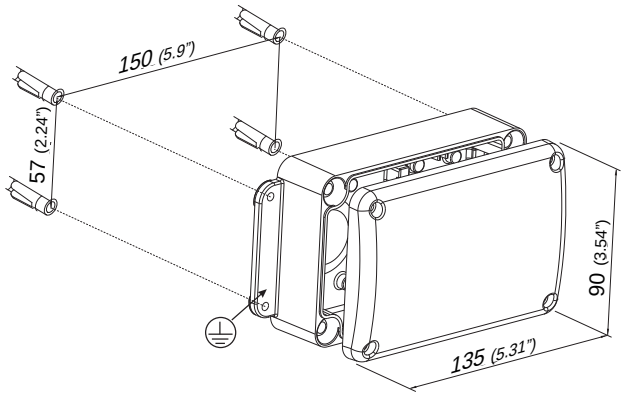

3.1 Mounting of metal housing

1. Drill the mounting holes according to the mounting template.

2. The bottom part of the housing is mounted with 4 screws (screw diameter: < 4.2mm (0.2") ; not included in the scope of supply).

3. Connection of the transmitter (see chapter 4 "Electrical connections").

4. Mounting of the middle part and cover with 4 screws (included in the scope of supply).

3.2 Mounting of sensors

Transmitter with fixed sensors

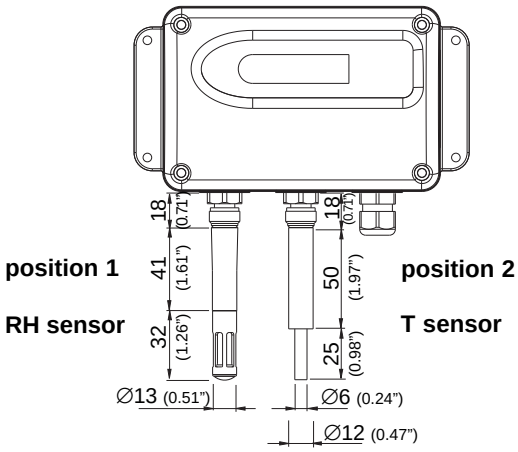

General:

When mounting the sensors please note that the **RH sensor or RH/T sensor** has to be mounted **always at position 1**, the **T sensor at position 2. (independent if it is a remote sensor or a fixed sensor)**

Mounting of fixed sensors:

The transmitter must be mounted with the sensor pointed downwards.

Transmitter with remote sensor:

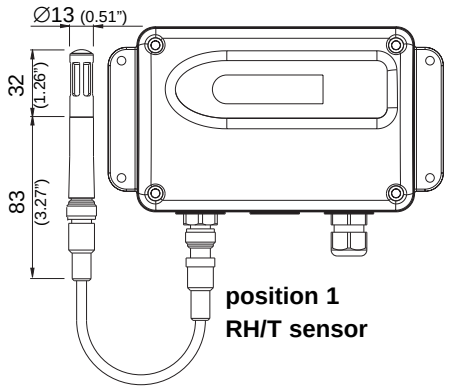

Mounting of remote sensors:

The sensors can be connected to the housing with special cables (2, 5 or 10m / 6.6ft, 16.4ft or 32.8ft).

Cable length	2m (6.6ft)	(order code: 90/00503577)
	5m (16.4ft)	(order code: 90/00503578)
	10m (32.8ft)	(order code: 90/00503579)

The sensor must be mounted horizontally or vertically, pointing downwards. If possible, a dripping water protector should be fitted.

4. ELECTRICAL CONNECTIONS

Voltage output

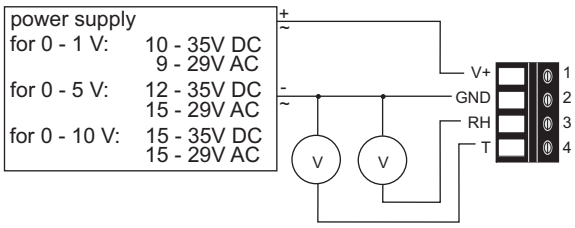

Current output

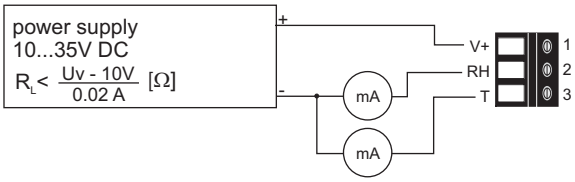

Transmitters with connectors

Voltage output

Plug for supply and analogue output
(front view)

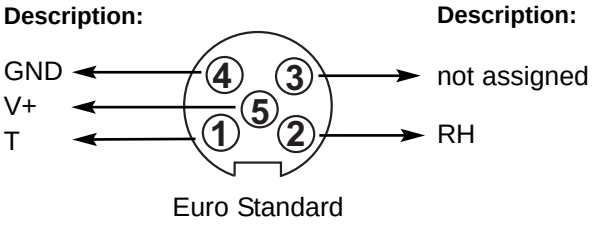

Euro Standard

Current output

Plug for supply and analogue output
(front view)

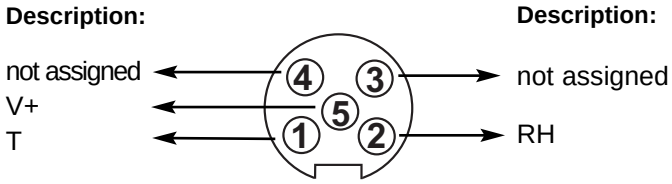

Euro Standard

EMC - Recommendations for Wiring

The indicated EMC guidelines can be guaranteed only in compliance with the sensor cables which are available as accessories.

- Metal housing models must be grounded for safe operation either inside at the designated points or outside at the mounting plates.
- Seperate cables which generate electromagnetic disturbances from the transmitter sensing probe cable and analogue output cabels.
- Shields of analogue signal cables should be grounded on one end only - best to the connected signal processing device. Unshielded cables should be twisted together in order to reduce symmetrical electromagnetic disturbances.
- Keep all cables as short as possible. Loops of cables may reduce EMC performance. Ground unused wires at both ends. Install all cables as close as possible to ground potential (e.g.: close to the walls, mounting plates or steel structure elements).

5. OPERATING COMPONENTS

5.1 Circuit board

4-20mA version

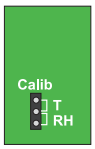

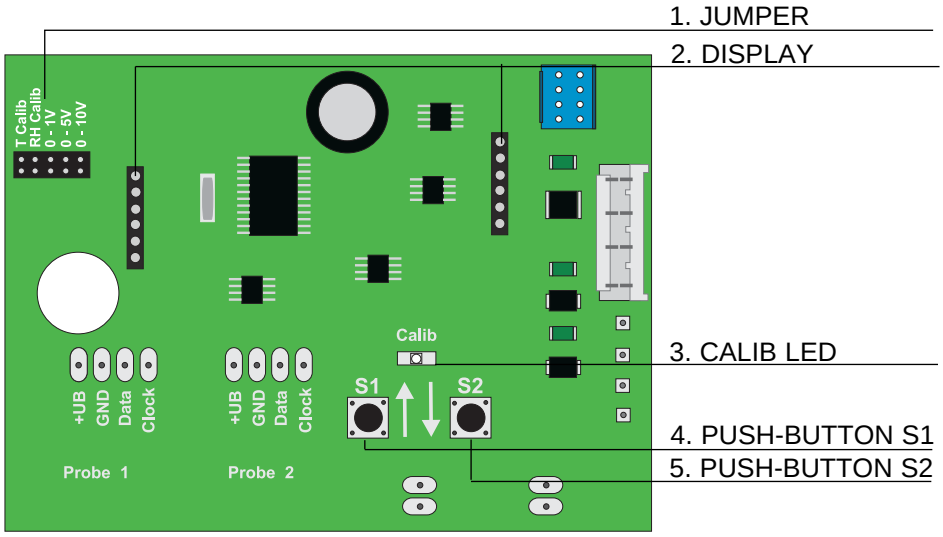

1. JUMPER: - selection of ouput and calibration mode

voltage version

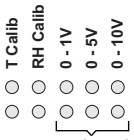

selection of output

4-20mA version



2. DISPLAY: - place for optional display

3. CALIB LED:
- lit permanently during the calibration routine
- lit up shortly when reset to factory calibration settings

4. PUSH-BUTTON S1:
- Push-Button S1 for 1-point humidity / temperature calibration (humidity >50%RH / temperature >50% of measurement value)
- Push-Button S1 for 2-point humidity / temperature calibration (high calibration point)
- Push-Button S1 to store the calibration values

5. PUSH-BUTTON S2:
- Push-Button S2 for 1-point humidity / temperature calibration (humidity <50%RH / temperature <50% of measurement value)
- Push-Button S2 for 2-point humidity / temperature calibration (low calibration point)
- Push-Button S2 to end the calibration procedure without storing the calibration values

4+5. PUSH-BUTTON S1+S2: - Push-Buttons S1+S2 to reset to factory calibration settings

5.2 Display

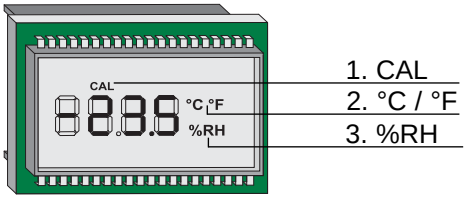

1. CAL: - is indicated during the calibration procedure
2. °C / °F: - unit for temperature °C °F: - unit for temperature °F
3. %RH: - unit for rel. humidity (%RH)

6. HUMIDITY-/ TEMPERATURE CALIBRATION

The transmitters can be calibrated in two ways:

- 1-point humidity / *temperature calibration*: quick and simple calibration on a defined humidity / *temperature point* (working point).
- 2-point humidity / *temperature calibration*: simple calibration for accurate measuring results over the whole humidity / *temperature working range*.

- To reach a temperature balance it is recommended to keep the transmitter and the reference chamber for minimum 4 hours in the same room.
- During calibration procedure it is important to keep the temperature constant!
- For calibration the humidity sensor must be stabilised at least 30 minutes in the reference chamber.
- Replace a used dirty filter cap before calibration!
- The calibration values are only stored in the sensor.

6.1 2-point humidity calibration / *2-point temperature calibration*

For accurate adjustment over the whole working range a two point calibration is recommended.

- Start calibration at the low calibration point!
- The difference between the two calibration points should be > 30%RH / > *30 degC (86°F)*

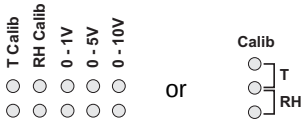

2-point humidity calibration / *temperature calibration procedure* (Start at low calibration point):

1. At the beginning of a humidity calibration set the jumper to RH Calib / *for a temperature calibration set the jumper to T Calib.*

low calibration point:

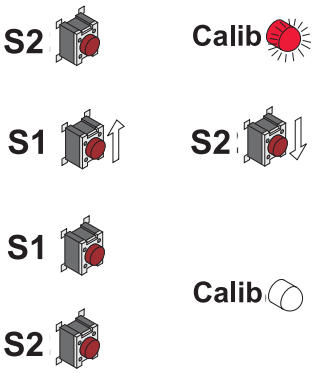

2. Insert the sensor into the reference humidity / *reference temperature* 1 (low calibration point) and stabilise for at least 30 minutes.

3. BUTTON S2: Pressing the button for 3 seconds starts the procedure for the low calibration point. The calibration mode is indicated by the lit LED "Calib" and by the symbol "CAL<" on the LC display.

4. BUTTON S1 (up) and **S2 (down)**: Pressing the two buttons will adjust the measuring value in steps of 0.1% / *0.1 degC* up or down to the reference value. The actual measuring value is indicated on the display or can be measured with the analogue output.

5. BUTTON S1: Pressing the button for 3 seconds the calibration value is stored in the sensor and the procedure is ended. Exiting the calibration mode is indicated by deactivation of the LED "Calib" and the symbol "CAL" on the LC display.
BUTTON S2: Pressing the button for 3 seconds the calibration procedure will be ended without storing the calibration values. Exiting the calibration mode is indicated by deactivation of the LED "Calib" and the symbol "CAL" on the LC display.

high calibration point:

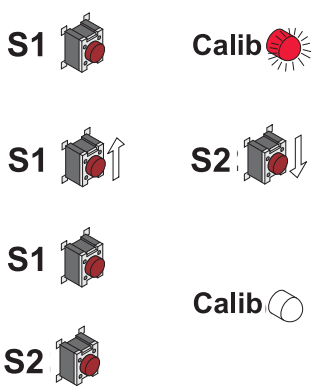

6. Insert the sensor into reference humidity / *reference temperature* 2 (high calibration point) and stabilise for minimum 30 min.

7. BUTTON S1: Pressing the button for 3 seconds starts the procedure for the high calibration point. The calibration mode is indicated by the lit LED "Calib" and by the symbol "CAL>" on the LC display.

8. BUTTON S1 (up) and **S2 (down)**: Pressing the two buttons will adjust the measuring value in steps of 0.1% / *0.1 degC* up or down to the reference value. The actual measuring value is indicated on the display or can be measured with the analogue output.

9. BUTTON S1: Pressing the button for 3 seconds the calibration value is stored in the sensor and the procedure is ended. Exiting the calibration mode is indicated by deactivation of the LED "Calib" and the symbol "CAL" on the LC display.
BUTTON S2: Pressing the button for 3 seconds the calibration procedure will be ended without storing the calibration values. Exiting the calibration mode is indicated by deactivation of the LED "Calib" and the symbol "CAL" on the LC display.

6.2 1-point humidity calibration / *1-point temperature calibration*

When the working range is limited to a certain more narrow range, a calibration at one humidity point / *temperature point* is sufficient.

- In accordance with the working range, either the high or low calibration point should be selected. (CP > or < 50% RH / CP > or < 50% of measurement value)
- This calibration causes an extra inaccuracy for the rest of the working range.

1-point humidity calibration / *temperature calibration procedure*

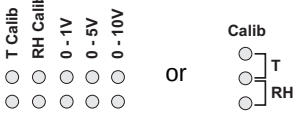

1. At the beginning of a humidity calibration set the jumper to RH Calib / *for a temperature calibration set the jumper to T Calib.*

2. Insert the sensor into the reference humidity / *reference temperature* (calibration point) and stabilise for at least 30 minutes.

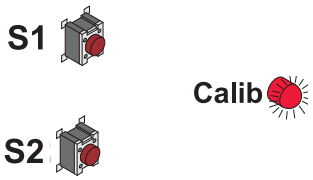

3. BUTTON S1 (Calibration point > 50% RH / > *50% of measurement value*): Pressing the button for 3 seconds starts the procedure. The calibration mode is indicated by the lit LED "Calib" and by the symbol "CAL>" on the LC display.
or
BUTTON S2 (Calibration point < 50% RH / < *50% of measurement value*): Pressing the button for 3 seconds starts the procedure. The calibration mode is indicated by the lit LED "Calib" and by the symbol "CAL<" on the LC display.



4. BUTTON S1 (up) and **S2 (down)**: Pressing the two buttons will adjust the measuring value in steps of 0.1% / *0.1 degC* up or down to the reference value. The actual measuring value is indicated on the display or can be measured with the analogue output.

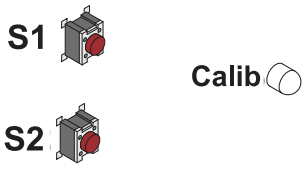

5. BUTTON S1: Pressing the button for 3 seconds the calibration value is stored in the sensor and the procedure is ended. Exiting the calibration mode is indicated by deactivation of the LED "Calib" and the symbol "CAL" on the LC display.
BUTTON S2: Pressing the button for 3 seconds the calibration procedure will be ended without storing the calibration values. Exiting the calibration mode is indicated by deactivation of the LED "Calib" and the symbol "CAL" on the LC display.

6.3 Resetting the customer calibration to the factory calibration:



BUTTON S1 and S2: To reset the RH or T values, the jumper has to be set on the respective location before starting the factory calibration.
In neutral mode pressing both buttons simultaneously for 5 seconds customer calibration settings are reset to factory calibration.
A short flash of the LED "Calib" indicates the reset.

7. MAINTENANCE

7.1 Replacement of sensor

The 90.7027 series are transmitters with interchangeable sensors and connectors. If the sensor gets damaged (e.g. mechanical destruction of the sensor) it is possible to replace the sensor without re-adjustment.

Procedure of replacement:
1) Switch off supply voltage
2) Remove damaged sensor
3) Plug in the replacementsensor



Attention: Do not mix up the position of the sensors!
(see chapter 3.1 “Mounting of the sensor”)

7.2 Self-help in case of errors



- **Error**
  possible cause
  ⇒ *Measures / Help*

- **Display shows incorrect values**
  Error during re-adjustment of the transmitter
  ⇒ *Reset to factory calibration and repeat the calibration routine*
  Filter soiled
  ⇒ *Replace filter*
  Sensor defective
  ⇒ *Replace sensor*

- **Long response time**
  Filter soiled
  ⇒ *Replace filter*
  Incorrect filter type
  ⇒ *Filter type should match the application*

- **Transmitter failure**
  no supply voltage
  ⇒ *Check wiring and supply voltage*

- **High humidity values**
  Dew (condensation) in sensor head
  ⇒ *Dry sensor head and check the mounting of the sensor*
  Incorrect filter type
  ⇒ *Filter type should match the application*

8. REPLACEMENT PARTS / ACCESSORIES

Description	Order Code
- Filter	
- PTFE Filter	90/00503575
- Metal grid filter (stainless steel)	90/00503576
- Display and housing cover	90/00504576
- Replacement sensor RH+T (PTFE)	90/00504578
- Replacement sensor RH+T (standard)	90/00504580
- Replacement sensor T	90/00504581
- Reference sensors	90/00504582
- Probe cable for remote sensor	
- 2m (6.6ft)	90/00503577
- 5m (16.4ft)	90/00503578
- 10m (32.8ft)	90/00503579

9. TECHNICAL DATA

Measuring values of sensor

Relative Humidity

Sensor element [1]	HC105		
Working range [1]	0...100% RH		
Accuracy [2] (including hysteresis, non-linearity and repeatability, traceable to international standards, administrated by NIST, PTB, BEV...)			
	-15...40°C (5...104°F)	<90% RH	± (1.5 + 0.5%*mv) % RH
	-15...40°C (5...104°F)	>90% RH	± 2.5% RH
	-40...80°C (-40...176°F)		± (1.7 + 1.5%*mv) % RH
Temperature dependence of electronics	typ. ± 0.006% RH/°C		
Response time with metal grid filter	< 15s (at 20°C / t_{90})		

Temperature

Sensor element	Pt1000 (tolerance class A, DIN EN 60751)	
Working range sensor	fixed sensor: -40...60°C (-40...140°F) remote sensor: -40...80°C (-40...176°F)	
Accuracy (typ.)	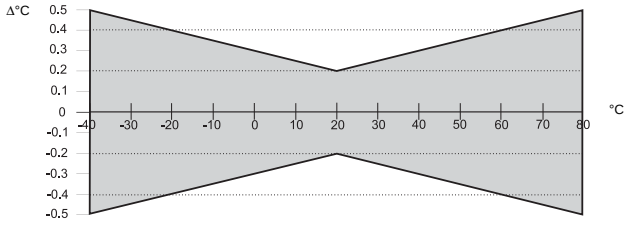	
Temperature dependence of electronics	typ. ± 0.007°C/°C	
Response time	with combined RH/T sensor:	t_{63}: typ. < 3min
	with seperated RH and T sensors:	t_{63}: typ. < 6min

Outputs

0...100% RH/ xx...yy°C [3]	0 - 1V		-0.5mA < I_L < 0.5mA
(temperature output scale according to	0 - 5V / 0 - 10V		-1mA < I_L < 1mA
Txx ordering code)	4 - 20mA (two wire)		R_L < 500 Ohm
Temperature dependence of analogue outputs	max. 0.2 $\frac{mV}{°C}$ resp. 1 $\frac{\mu A}{°C}$		

General

Supply voltage SELV			
for 0 - 1V output	10 - 35V DC	or	9 - 29V AC
for 0 - 5V output	12 - 35V DC	or	15 - 29V AC
for 0 - 10V output	15 - 35V DC	or	15 - 29V AC
for 4 - 20mA output	10 - 35V DC		SELV = Safety Extra Low Voltage
Load resistor for 4 - 20mA output	$R_L < \frac{U_V - 10V}{0.02\ A}$ [Ω]		
Current consumption	typ. 10mA for DC supply		typ. 20mA_{eff} for AC supply
Electrical connection	screw terminals max. 2.5mm^2		
Cable gland	M16x1.5	cable Ø 4.5 - 10 mm (0.18 - 0.39")	
	(optional connector; type: Lumberg, RSF 50/11)		
Sensor protection	PTFE filter, metal grid filter (stainless steel)		
Material	housing: Al Si 9 Cu 3		sensor: PC or stainless steel
Weight	approx. 800 g		
Protection class	housing: IP65; (Nema 4)		
	with rear cable entry	- mounting on smooth wall: IP40	
		- otherwise: IP10	
Electromagnetic compatibility	EN 61000-6-3	FCC Part15 ClassB	CE
	EN 61000-6-2	ICES-003 ClassB	
Working temperature range of sensor	-40...60°C (-40...140°F) / 80°C (176°F) for remote sensor		
Working temperature range of electronics	-40...60°C (-40...140°F)		
Storage temperature range	-40...60°C (-40...140°F)		

1) Refer to working range of humidity sensor HC105

2) The accuracy statement includes the uncertainty of the factory calibration with an enhancement factor k=2 (2-times standard deviation). The accuracy was calculated in accordance with EA-4/02 and with regard to GUM (Guide to the Expression of Uncertainty in Measurement).

3) Refer to ordering guide

Instructions for display change

JUMO GmbH & Co. KG
Street address: Moritz-Juchheim-Straße 1, 36039 Fulda, Germany
Delivery address: Mackenrodtstraße 14, 36039 Fulda, Germany
Postal address: 36035 Fulda, Germany

Phone: +49 661 6003-0
Fax: +49 661 6003-607
e-Mail: mail@jumo.net
Internet: www.jumo.net

1. Remove cover.

2. Cut off transmitter from supply, either by switching off power supply or by removing the screw terminal for supply voltage.

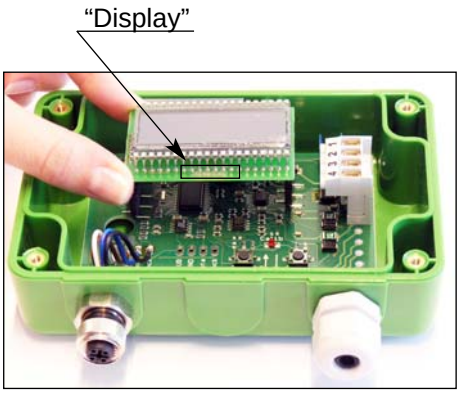

3. Attach display according to illustration, pay attention to installation direction!
NOTE: consider ESD regulations!

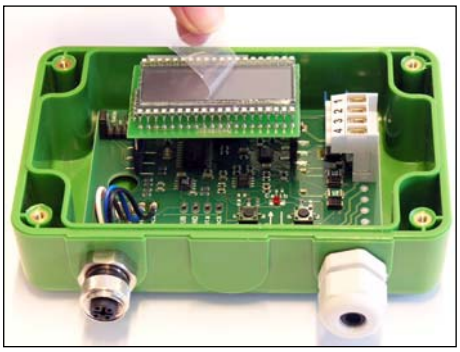

4. Remove protection film from display.

5. Screw cover with display window on lower module.

6. Turn on power supply or plug in screw terminal for supply voltage.

Application note for reference sensors

JUMO GmbH & Co. KG
Street address: Moritz-Juchheim-Straße 1, 36039 Fulda, Germany
Delivery address: Mackenrodtstraße 14, 36039 Fulda, Germany
Postal address: 36035 Fulda, Germany

Phone: +49 661 6003-0
Fax: +49 661 6003-607
e-Mail: mail@jumo.net
Internet: www.jumo.net

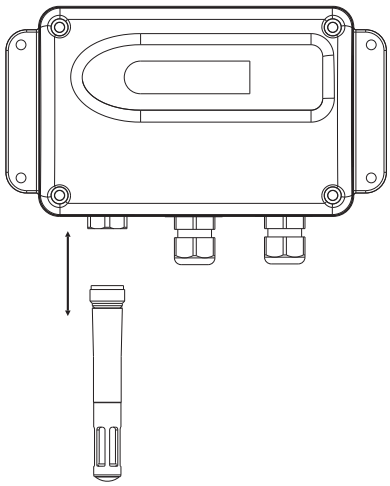

Plug in reference sensor 1/2 and check analogue output

The reference sensors are designed to check/validate the digital-/ analogue conversion in the basic unit.
Both interchangeable sensors simulate defined humidity and temperature values in order to check the same at the analogue outputs.

Measurement circuitry

Voltage output

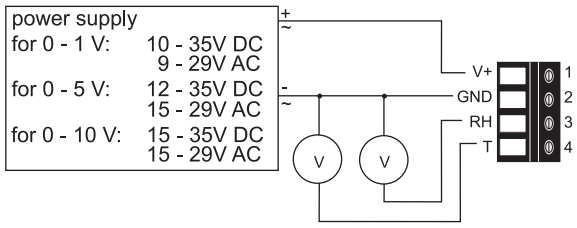

V....Voltmeter

Current output

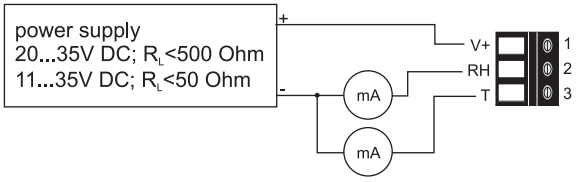

mA...Amperemeter



reference sensors

humidity	reference [%]	4-20mA	0-1V	0-5V	0-10V
sensor 1	10	5.6	0.1	0.5	1.0
sensor 2	90	18.4	0.9	4.5	9.0

temperature	reference [°C	4-20mA	0-1V	0-5V	0-10V
sensor 1	45	18.4	0.1	4.5	9.0
sensor 2	5.0	5.6	0.9	0.5	1.0

Values are valid for temperature scaling T04 = 0...50°C only (32...122°F)

For other temperature scalings:

4-20mA: Iout [mA] = (16*(Ref/Tmax)) + 4mA
0-1,5,10V: Uout [V] = (Abb*(Ref/Tmax))

Abb...*voltage scaling (1V, 5V, 10V)*
Ref...*reference value of temperature (45°C (113°F) resp. 5°C (41°F))*
Tmax...*max. temperature scaling (e.g. 50°C (122°F))*

JUMO GmbH & Co. KG
Street address:
Moritz-Juchheim-Straße 1
36039 Fulda, Germany
Delivery address:
Mackenrodtstraße 14
36039 Fulda, Germany
Postal address:
36035 Fulda, Germany
Phone: +49 661 6003-0
Fax: +49 661 6003-607
e-mail: mail@jumo.net
Internet: www.jumo.net

JUMO Instrument Co. Ltd.
JUMO House
Temple Bank, Riverway
Harlow, Essex CM 20 2 TT, UK
Phone: +44 1279 635533
Fax: +44 1279 635262
e-mail: sales@jumo.co.uk
Internet: www.jumo.co.uk

JUMO Process Control, Inc.
8 Technology Boulevard
Canastota, NY 13032, USA
Phone: 315-697-JUMO
1-800-554-JUMO
Fax: 315-697-5867
e-mail: info@jumo.us
Internet: www.jumo.us