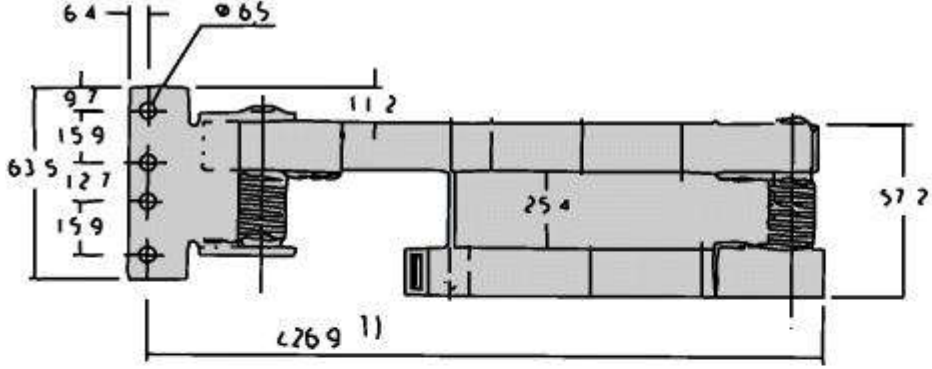

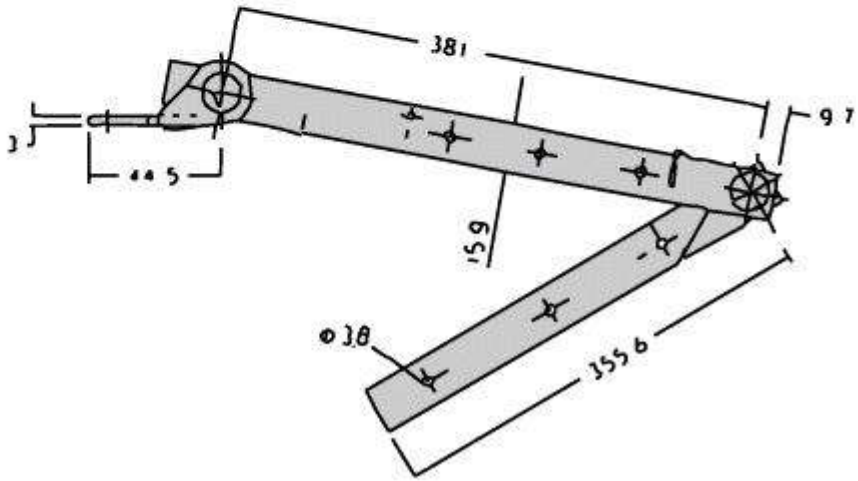

Part no.: 20118-729

Features:

- **For cable management on telescopic units and chassis**
- **Cable mounting with cable ties**
- **Shelf with return spring for even cable ducting**

RoHS COMPLIANT

Technical Data:

	Cable support with return spring
Load-carrying capacity:	2 kg
Extension length	730 mm
Required space in retracted state	25 mm
Material	St, square tube, 16 mm^2, zinc-plated