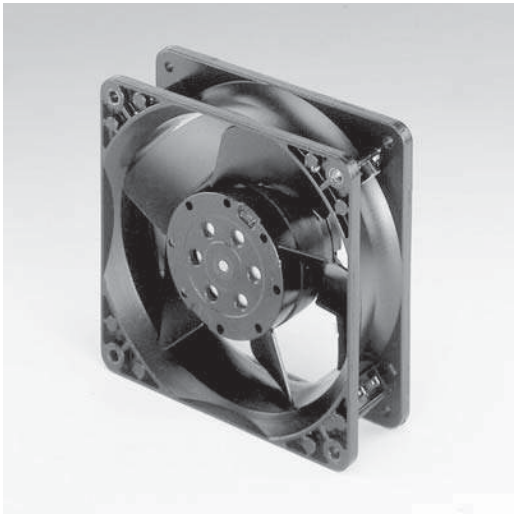

4000Z Series Tubeaxial

119x119x38mm

- AC fans with external rotor shaded-pole motor. Impedance protected against overloading.
- Metal fan housing and impeller.
- Air exhaust over struts. Rotational direction CW looking at rotor.
- Mounting from either face using four 4.3 mm holes.
- Electrical connection: Terminals with 2 flat pins 2.8 x 0.5 mm.
- Fan housing with ground lug for screw M4 and UNC.
- UL, CSA, VDE approvals on some models, please contact application engineering.

Part Number	Curve	CFM @ 0	VAC	Hertz	Power (W)	dBA	Max Amb. Temp C	Bearing Type	Speed (RPM)	Features	Wgt. (lbs)
4624ZW	3	106	24	50/60	18	45	75	Ball	1700	Leads	1.19
4800Z	1	56	115	50/60	10	28	75	Sintec	1800	Terminals	1.19
4800ZW	1	56	115	50/60	10	28	75	Sintec	1800	Leads	1.19
4530Z	2	71	115	50/60	12	33	65	Sintec	2000	Terminals	1.19
4530ZW	2	71	115	50/60	12	33	65	Sintec	2000	Leads	1.19
4600Z	3	106	115	50/60	18	45	60	Sintec	3100	Terminals	1.19
4606Z	3	106	115	50/60	18	45	75	Ball	3100	Terminals	1.19
4600ZW	3	106	115	50/60	18	45	60	Sintec	3100	Leads	1.19
4606ZW	3	106	115	50/60	18	45	75	Ball	3100	Leads	1.19

Available on request:
- Electrical connection via 2 single leads 310 mm long.

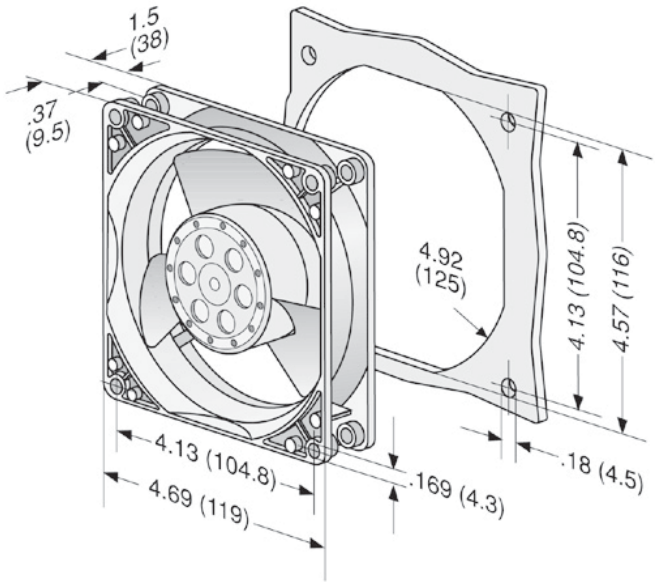

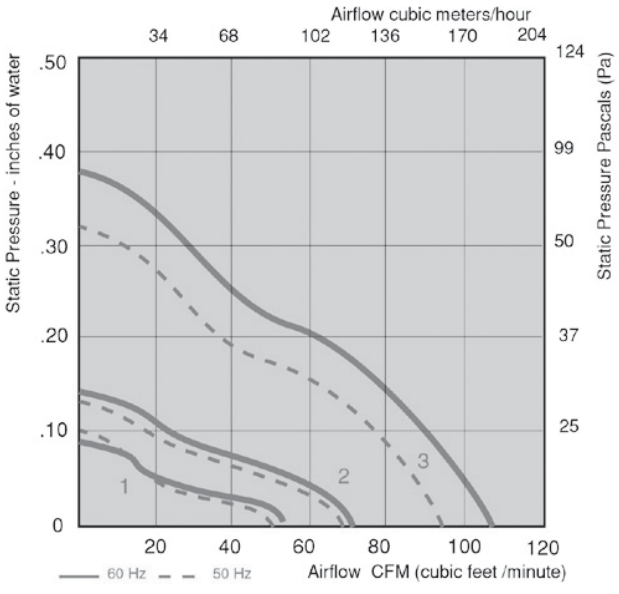

ebmpapst

e-mail: sales@us.ebmpapst.com · TEL: 860-674-1515 · FAX: 860-674-8536
ebm-papst Inc., 100 Hyde Road, Farmington, CT 06034 USA
ebm-papst Inc., 2004 © ebm-papst Inc. reserves the right to change any specifications or data without notice

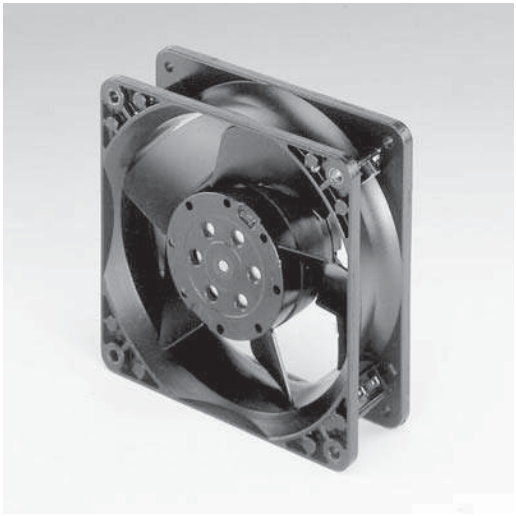

4000Z Series cont. Tubeaxial

119x119x38mm

- AC fans with external rotor shaded-pole motor. Impedance protected against overloading.
- Metal fan housing and impeller.
- Air exhaust over struts. Rotational direction CW looking at rotor.
- Mounting from either face using four 4.3 mm holes.
- Electrical connection: Terminals with 2 flat pins 2.8 x 0.5 mm.
- Fan housing with ground lug for screw M4 and UNC.
- UL, CSA, VDE approvals on some models, please contact application engineering.

Part Number	Curve	CFM @ 0	VAC	Hertz	Power (W)	dBA	Max Amb. Temp C	Bearing Type	Speed (RPM)	Features	Wgt. (lbs)
4850Z	56	1	230	50/60	10	28	75	Sintec	1700	Terminals	1.19
4850ZW	56	1	230	50/60	10	28	75	Sintec	1700	Leads	1.19
4580Z	71	2	230	50/60	12	33	65	Sintec	1900	Terminals	1.19
4580ZW	71	2	230	50/60	12	33	65	Sintec	1900	Leads	1.19
4650Z	106	3	230	50/60	18	45	60	Sintec	2650	Terminals	1.19
4650ZW	106	3	230	50/60	18	45	60	Sintec	2650	Leads	1.19
4656Z	106	3	230	50/60	18	45	75	Ball	1700	Terminals	1.19
4656ZW	106	3	230	50/60	18	45	75	Ball	1700	Leads	1.19
4590ZW	71	2	115/230	50/60	12	33	65	Sintec	1900	Leads	1.19

Available on request:
- Electrical connection via 2 single leads 310 mm long.

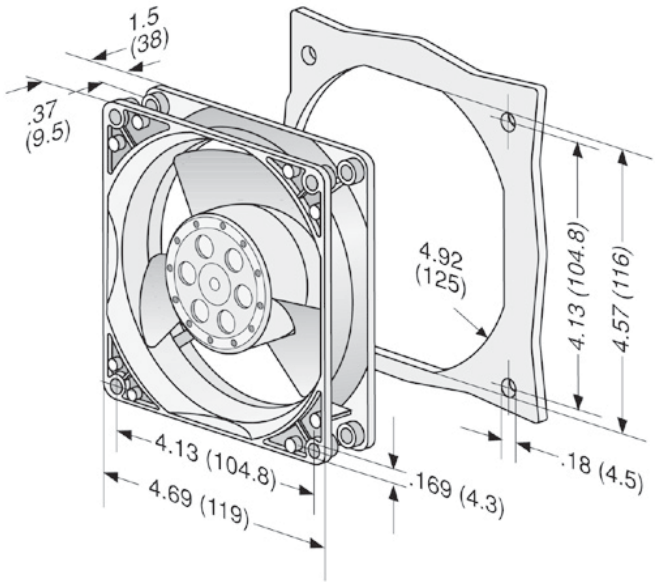

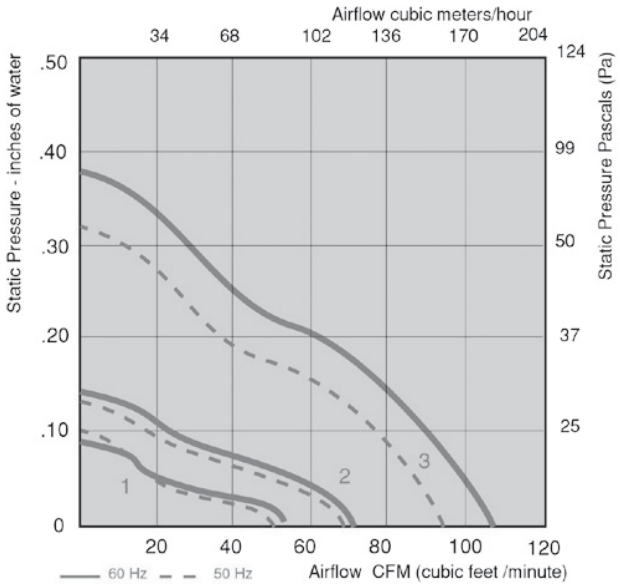

ebmpapst

e-mail: sales@us.ebmpapst.com · TEL: 860-674-1515 · FAX: 860-674-8536
ebm-papst Inc., 100 Hyde Road, Farmington, CT 06034 USA
ebm-papst Inc., 2004 © ebm-papst Inc. reserves the right to change any specifications or data without notice