IM512A

Inductive sensor

IMC4020BCPKG/US/3D/3G

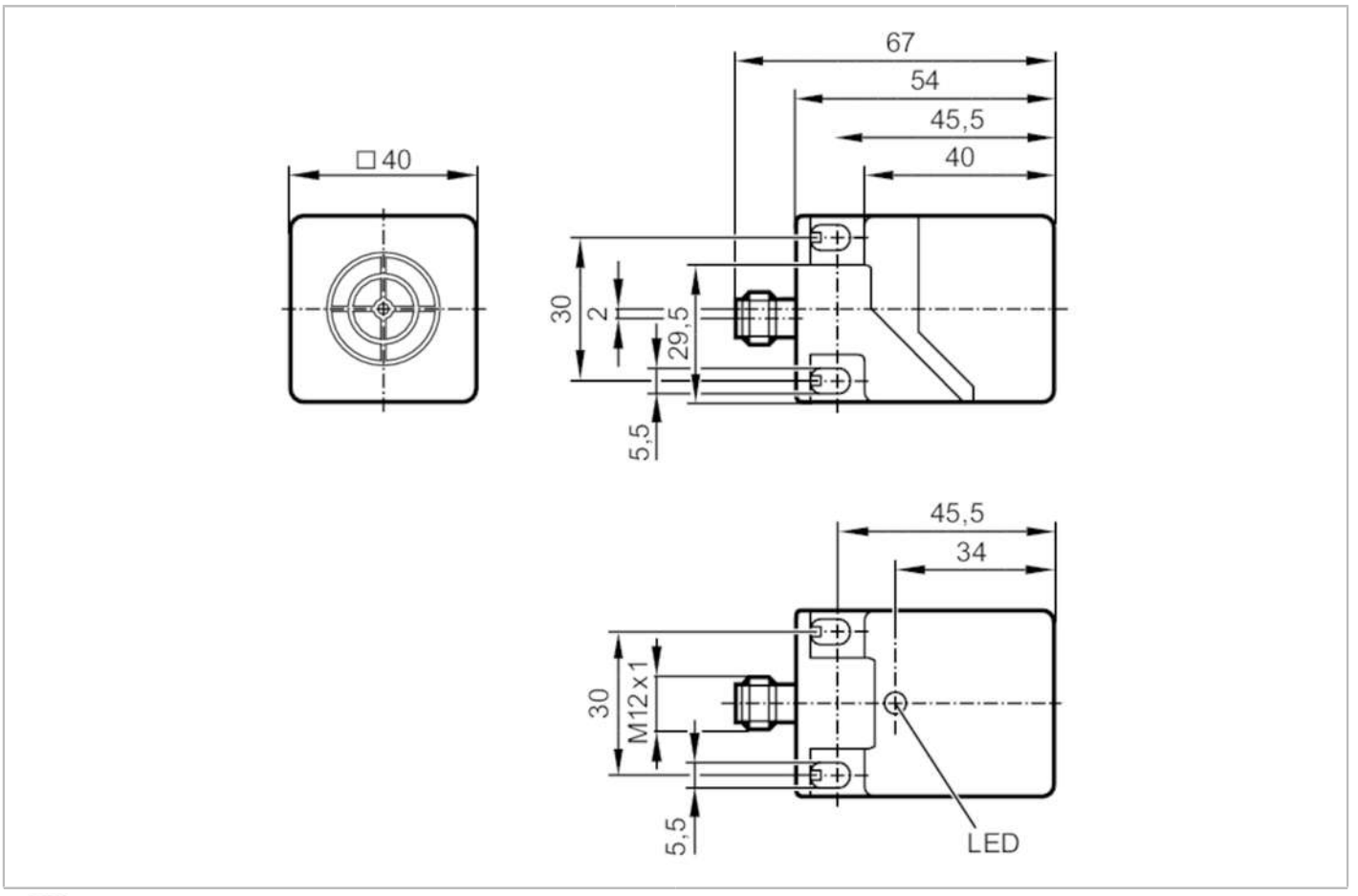

Product characteristics		
Electrical design		PNP
Output function		complementary
Sensing range	[mm]	20
Housing		rectangular
Dimensions	[mm]	40 x 40 x 54
Application		
Special feature		Gold-plated contacts
Electrical data		
Operating voltage	[V]	10...30 DC
Current consumption	[mA]	< 15
Protection class		III
Reverse polarity protection		yes
Outputs		
Electrical design		PNP
Output function		complementary
Max. voltage drop switching output DC	[V]	2.5
Max. leakage current	[mA]	0.5

IM512A

Inductive sensor

IMC4020BCPKG/US/3D/3G

Permanent current rating of switching output DC [mA]	200	
Switching frequency DC [Hz]	100	
Short-circuit proof	yes	
Overload protection	yes	
Detection zone		
Sensing range [mm]	20	
Real sensing range Sr [mm]	20 ± 10 %	
Operating distance [mm]	0...16.2	
Accuracy / deviations		
Correction factor	steel: 1 / stainless steel: 0.7 / brass: 0.4 / aluminium: 0.3 / copper: 0.2	
Hysteresis [% of Sr]	1...20	
Switch point drift [% of Sr]	-10...10	
Operating conditions		
Ambient temperature [°C]	-20...60	
Protection	IP 65; IP 67	
Tests / approvals		
ATEX marking	II 3D Ex tc IIIC T95°C Dc X; II 3G Ex ec IIC T4 Gc X	
EMC	EN 60947-5-2	
MTTF [years]	1326	
Mechanical data		
Weight [g]	170	
Housing	rectangular	
Mounting	flush mountable	
Dimensions [mm]	40 x 40 x 54	
Materials	PC; PA; TPE	
Displays / operating elements		
Display	switching status	1 x LED, yellow
Remarks		
Remarks	Recommendation: Check the safe functioning of the unit after a short circuit.	
	5 positions of the active zone possible	
Pack quantity	1 pcs.	

Electrical connection - plug

Connector: 1 x M12; coding: A; Contacts: gold-plated



IM512A

Inductive sensor

IMC4020BCPKG/US/3D/3G

Connection

