Product Data Sheet **8315100320**
VWCF080KHFKS
AF80-00320 12V
10.000

ebmpapst

engineering a better life



AF80-00320 12V 10.000

INDEX

1 General 3
2 Mechanics 3
2.1 General 3
2.2 Connections 3
3 Operating Data 5
3.1 Electrical Operating Data 5
3.2 Electrical Features 6
3.3 Aerodynamics 7
3.4 Sound Data 8
4 Environment 8
4.1 General 8
4.2 Climatic Requirements 8
4.3 EMC 9
5 Safety 10
5.1 Electrical Safety 10
5.2 Approval Tests 10
6 Reliability 10
6.1 General 10

1 General

Fan type	Axial	
Rotating direction looking at rotor	Counterclockwise	
Airflow direction	Air outlet over struts	
Bearing system	Ball bearing	
Mounting position - shaft	Any	

2 Mechanics

2.1 General

Width	80,0 mm	
Height	80,0 mm	
Depth	38,0 mm	
Mass	184 g	
Housing material	Plastic	
Impeller material	Plastic	
Max. torque when mounted across both mounting flanges Screw size	Wire outlet corner: 50 Ncm Remaining corners: 110 Ncm ISO 4762 - M4 degreased, without an additional brace and without washer	

2.2 Connections

Electrical connection	Wires	
Lead wire length Tolerance	L = 310 mm +- 10,0 mm	





Wire	Color	Operation	Wire size	Insulation diameter
1	red	+ UB	AWG 22	1,70 mm
2	blue	- GND	AWG 22	1,70 mm

The auxiliaries shown on the schematic diagram (which are required for the intended use) are not part of our delivery.

3 Operating Data

3.1 Electrical Operating Data

Measurement conditions: Normal air density = 1,2 kg/m3; Temperature 23°C +/- 3°C; Motor axis horizontal; warm-up time before measuring 5 minutes (unless otherwise specified). In the intake and outlet area should not be any solid obstruction within 0,5 m.

Δp = 0: corresp. to free air flow (see chapter aerodynamics)
I: corresp. to arithm. mean current value

Features	Condition	Symbol	Values		
Voltage range		U	8 V		16 V
Nominal voltage		U_N		12 V	
Power consumption Tolerance	Δp = 0 0010	P	6 W +- 17,5 %	12 W +- 17,5 %	12 W +- 17,5 %
Current consumption Tolerance	Δp = 0 0010	I	690 mA +- 17,5 %	1.000 mA +- 17,5 %	750 mA +- 17,5 %
Speed Tolerance	Δp = 0 0010	n	7.600 1/min +- 12,5 %	10.000 1/min +- 5 %	10.000 1/min +- 5 %
Starting current consumption				2.700 mA	

3.2 Electrical Features

Electronic function	Speed-Controlled	
Reversed polarity protection Max. residual current at U_N	P-CH FET I_F <= 150 uA	
Locked rotor protection	Auto restart	
Locked rotor current at U_N	I_{block} approx. 650 mA	
Clock signal at locked rotor	t_3 / t_4 typical: 3,7 s / 10,0 s	

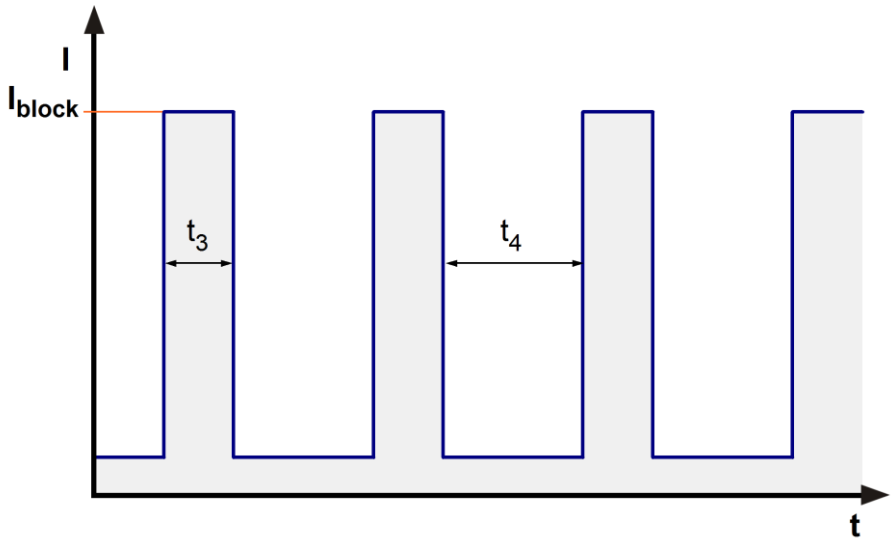

3.3 Aerodynamics

Measurement conditions:	Measured with a double chamber intake rig acc. to DIN EN ISO 5801. Normal air density = 1,2 kg/m3; Temperature 23°C +/- 3°C; In the intake and outlet area should not be any solid obstruction within 0,5 m. Motor shaft horizontal. The information is only valid under the specified test conditions and may be changed by the installation conditions. If there are deviations from the standard test conditions, the characteristic values must be checked under the installed conditions. Power consumption of the fan motor when operating at normal voltage is shown. Depending on the operating conditions of the application, the power input may be higher.

a.) Operation condition:

10.000 1/min at free air flow

Max. free-air flow (Δp = 0 / $\dot{V}$ = max.)	135 m3/h	
Max. static pressure (Δp = max. / $\dot{V}$ =0)	490 Pa	

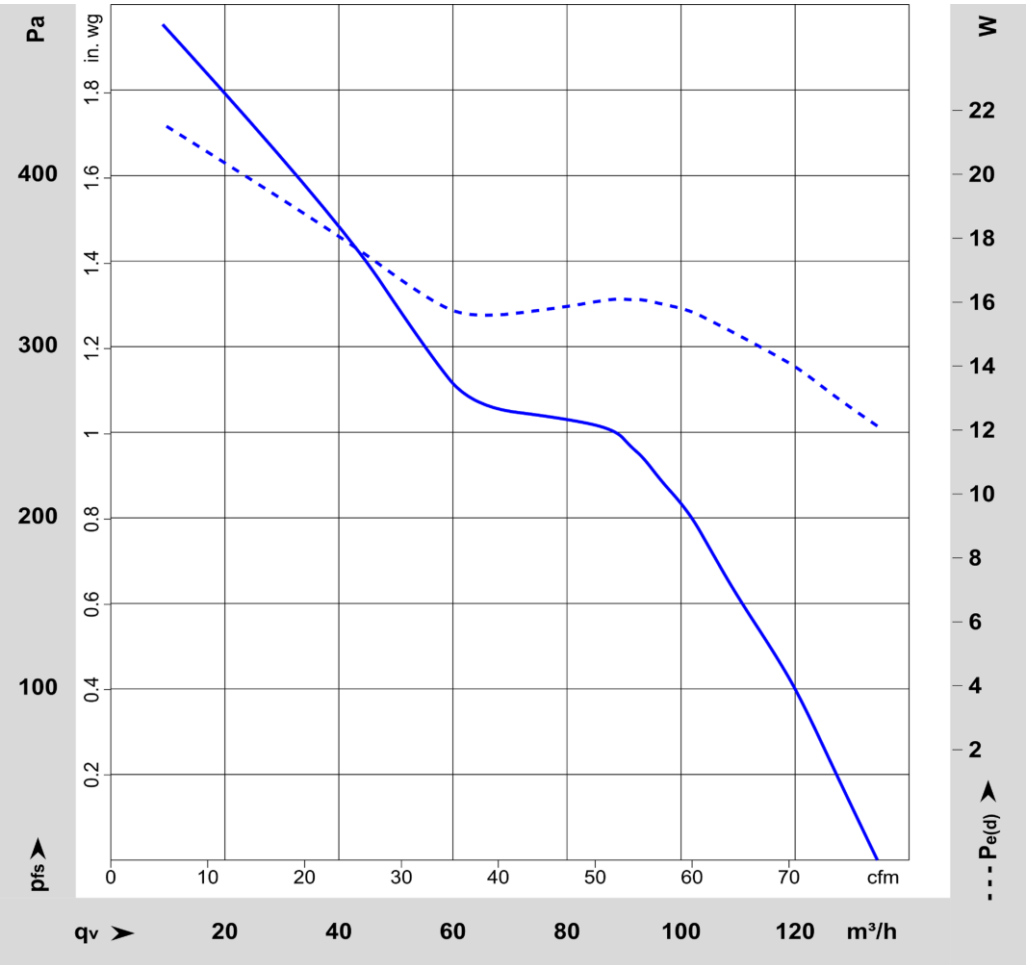

3.4 Sound Data

Measurement conditions:	Sound pressure level: 1 meter distance between microphone and the air intake. Sound power level: According to ISO 13347-3. Measured in a semianechoic chamber with a background noise level of Lp(A) < 5 dB(A) For further measurement conditions see chapter aerodynamics.

a.) Operation condition:

10.000 1/min at free air flow

Optimal operating point	90 m3/h @ 245 Pa	
Sound power level at the optimal operating point	7,1 bel(A)	
Sound pressure level at free air flow, measured in rubber bands	61 dB(A)	

Parts made with parts with pre-series tool.

4 Environment

4.1 General

Min. permitted ambient temperature TU min.	-20 °C	
Max. permitted ambient temperature TU max.	75 °C	
Min. permitted storage temperature TL min.	-40 °C	
Max. permitted storage temperature TL max.	80 °C	

4.2 Climatic Requirements

IP-protection type (certified)	IP 20 **)	
Humidity requirements	humid heat, constant; according to DIN EN 60068-2-78, 14 days	
Salt fog requirements	None	

Permitted application area:
The product is intended for use in sheltered rooms with controlled temperature and controlled humidity. Directly exposure to water must be avoided.

Pollution degree 1 (according DIN EN 60664-1)
There is either no pollution or it occurs only dry, non-conductive pollution. The pollution has no negative impact.

**) The specification of the IP protection refers to the conditions mentioned in certification of the fan. The above mentioned short description of the protection scope is not final. For detailed information of the respective protection scope and definitions, see certification as well as DIN EN 60529 (protection by housings) and ISO 20653 (for vehicles) with the letter K.

Short description of the IP-protection type:
Solid particle Protection: Protected against solid particles with a diameter of 12.5 mm and larger.
Protection against deliberate contact: Protected against contact to hazardous parts with a finger.
Protection against water: No protection.

Please require severity levels and specification parameters from the responsible development departments.

4.3 EMC

Kind	**Radiated Emission; 30 MHz - 1000 MHz**
According	DIN EN 55032:2016-02
Ceck accuracy / Limit	Class B
Result	Below limit Class B

Kind	**Electrostatic Discharge Immunity Test**
According	DIN EN 61000-4-2:2001-12
Ceck accuracy / Limit	Contact Discharge +/- 4 kV; Air Discharge +/- 8 kV
Result	A: The monitored function operates as designed during and after exposure to a disturbance.

5 Safety

5.1 Electrical Safety

Dielectric strength DIN EN 62368 and DIN EN 60335 A.) Type test Measuring conditions: After 48h of storage at 95% R.H. and 25°C. No arcing or breakdown is allowed! All connections together to ground. B.) Routine test Measuring conditions: At indoor climate. No arcing or breakdown is allowed! All connections together to ground.	500 VAC / 1 Min. 850 VDC / 1 Sec.	
Isolation resistance Measuring conditions: After 48h of storage at 95% R.H. and 25°C measured with U=500 VDC for 1 min.	RI > 10 MOhm	
Clearance / creepage distance	1,0 mm / 1,2 mm	
Protection class	III	

5.2 Approval Tests

CE	EC Declaration of Conformity	Yes
EAC	Eurasian Conformity	Yes
UL	Underwriters Laboratories	Yes / UL507, Electric Fans E38324
VDE	Association for Electrical, Electronic and Information Technologies	Yes / Approval acc. to EN 62368 - Audio/video, information and communication technology equipment
CSA	Canadian Standards Association	Yes / CSA audited by UL according to C22.2 No. 113 Fans and Ventilators
CCC	China Compulsory Certification	Not applicable

6 Reliability

6.1 General

Life expectancy L10 at TU = 40 °C	67.500 h	
Life expectancy L10 at TU max.	27.500 h	
Life expectancy L10 acc. to IPC 9591 at TU = 40 °C	115.000 h	

The reproduction, distribution and utilization of this document as well as the communication of its contents to others without express authorization is prohibited. Offenders will be held liable for the payment of damages. All rights reserved in the event of the grant of a patent, utility model or design. Refer to protection notice ISO 16016!
Note: In case of multilingual information in this document and in the applicable documents referred to in this document, only the English version shall be authoritative and legally binding in the event of contradictions in content.

AxiForce 80 Baureihe
AxiForce 80 series

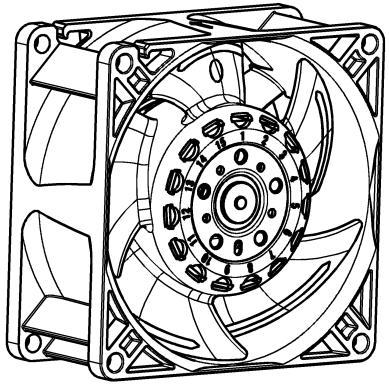

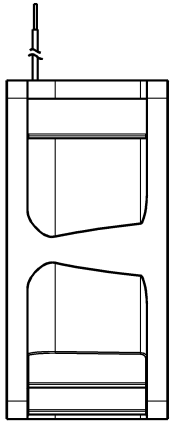

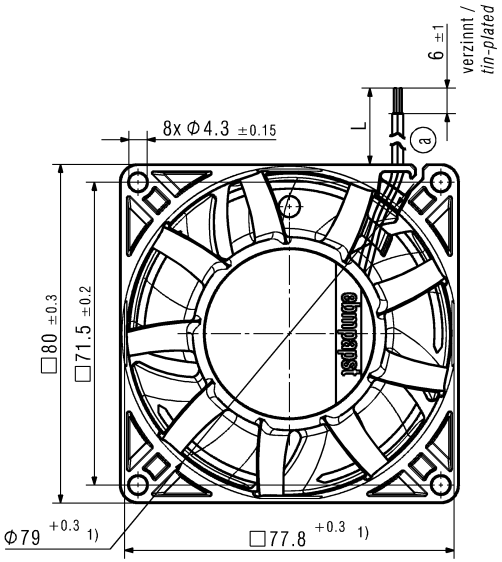

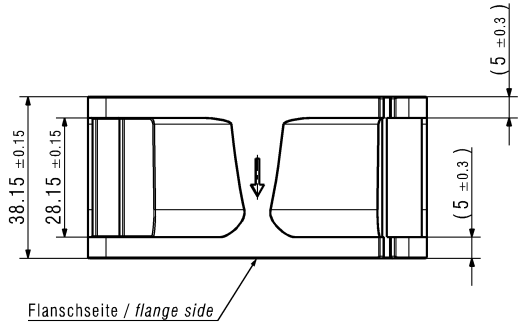

1) Maße für Montagewand / *Dimensions for assembly wall*
- Kein Axialspiel der Kugellager durch Federausgleich/
  No axial clearance of ball bearings due to a pre-load spring
- Anzahl und Länge der Litze siehe Produktspezifikation
  Quantity and length of the wires according to design specification

Title				Material	Digital signature
First created for:	Index A	Doc type	Sheet		Change-No.
	Designed name		Designed date	Volume [mm³]	CAD environment
Substitute for	Released name		Released date	Mass [g]	CAD release
ebmpapst ebm-papst St. Georgen GmbH & Co. KG	Tolerances			General tolerances	3D-reference model 8315100320 CPR 000 -
	Scale	Format	Document status		