E40193

Mounting adapter for flow sensors

ADAPTER G1-NPT3/4/V4A

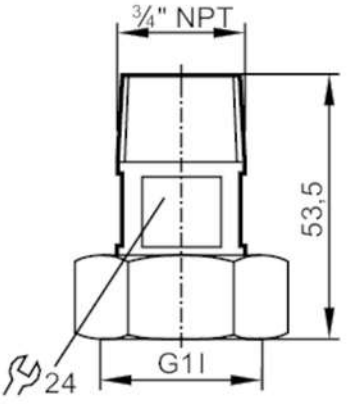

CRN

Application		
Design		for flow sensors Typ SM8, SU8
MAWP (for applications according to CRN)	[bar]	16
Tests / approvals		
Pressure Equipment Directive		A possible classification to PED depends on the application and has to be carried out by the user / operator.
Pressure Equipment Directive EAC		The adapter is intended for use in devices, machines and installations that do not fall under the categories of the technical rule TR CU 032/2013.
Safety instructions		The compatibility between medium and product material has to be checked in all applications.
Mechanical data		
Weight	[g]	392.5
Materials		Adapter: stainless steel (1.4404 / 316L); Gasket: Centellen 23,5 x 30 x 3 mm
Sensor connection		G 1
Process connection		threaded connection 3/4" NPT
Accessories		
Items supplied		O-rings: 2
Remarks		
Pack quantity		2 pcs.