RAMO 30 F, USB, round collar, frontring stainless steel, USB 3.0 type A with cable 55 cm



fields of application

- Measurement-control-regulation
- Electrical engineering
- Mechanical and system engineering
- Vehicle construction
- Chemical industry
- Industrial robots
- Home technology

description

Cable feed-through for front panels. Front side USB 3.0 or RJ45, rear side with corresponding sockets in the housing or 55 cm cable and socket.

technical data

general

Collar color	black
Front ring color	stainless steel
Collar shape	round
Operating temperature, min.	-25 °C
Operating temperature, max.	70 °C
Storage temperature, min.	-40 °C
Storage temperature, max.	90 °C
illuminated	No
Packaging	Box
Packaging unit	2 pcs.
net weight	65.2 g
Operating life	1,500 cycles
Degree of protection, front side, according to DIN EN 60529	IP65 with sealing cap
UL Enclosure Type Rating front side	type 4X indoor
Environment resistance	IEC 60068-2-14 IEC 60068-2-30 IEC 60068-2-78
Impact resistance IK	04 side
MOQ order	2 pcs.
RoHS compliant	Yes
REACH compliant	Yes

mounting diameters

direct links

- RAFI eCatalog

The information in this data sheet only contains general descriptions and / or performance features, which may not apply precisely as described to the respective application, and which my change due to further product enhancements. The technical data, illustrations and other information about our products are the mere results of individual technical testing. These descriptions and other product features are only binding if they expressly agreed upon at the time of the conclusion of a binding contract. In all other cases, we reserve the right to make technical changes as well as changes of availability. Pictures and other graphic illustrations are approximations only. All product names may be trademarks or brand names of the RAFI Group or any other sub-supplier of RAFI. The use of such by any third parties for their own purposes may infringe the rights of the respective entity holding those rights.

RAFI GmbH & Co. KG

Ravensburger Str. 128-134
88276 Berg / Ravensburg
Germany
www.rafi-group.com,
info.headquarters@rafi-group.com

Outside dimension, length	34.5 mm
Outside dimension, width	34.5 mm
Outside dimension, height	45.2 mm
Mounting hole	30.3 mm
Mounting depth	32.82 mm
Installation height	5.25 mm
Grid, min.	35 mm
Collar dimension	34.5 mm

mechanical data

Fixing	Threaded ring
Threaded ring torque, max.	1.2 Nm
Front side terminal	USB 3.0 type A
Terminal on the rear	USB 3.0 type A with cable 55 cm

The information in this data sheet only contains general descriptions and / or performance features, which may not apply precisely as described to the respective application, and which my change due to further product enhancements. The technical data, illustrations and other information about our products are the mere results of individual technical testing. These descriptions and other product features are only binding if they expressly agreed upon at the time of the conclusion of a binding contract. In all other cases, we reserve the right to make technical changes as well as changes of availability. Pictures and other graphic illustrations are approximations only. All product names may be trademarks or brand names of the RAFI Group or any other sub-supplier of RAFI. The use of such by any third parties for their own purposes may infringe the rights of the respective entity holding those rights.

RAFI GmbH & Co. KG

Ravensburger Str. 128-134
88276 Berg / Ravensburg
Germany
www.rafi-group.com,
info.headquarters@rafi-group.com

drawings

Dimensioned drawing

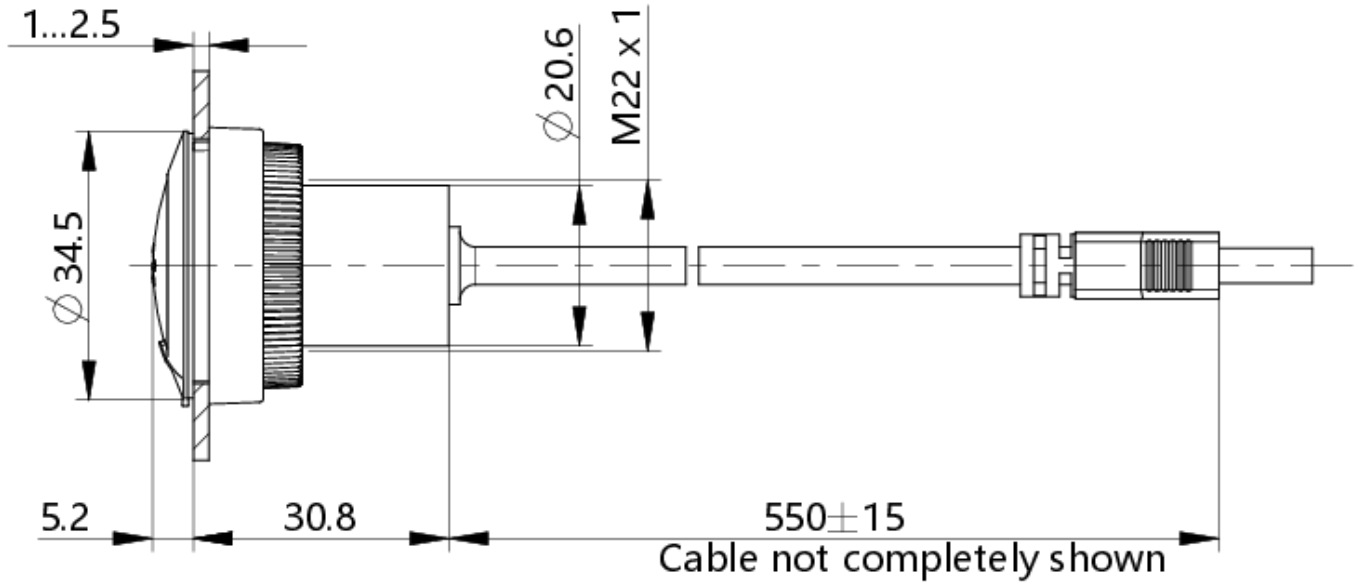

Mounting hole drawing

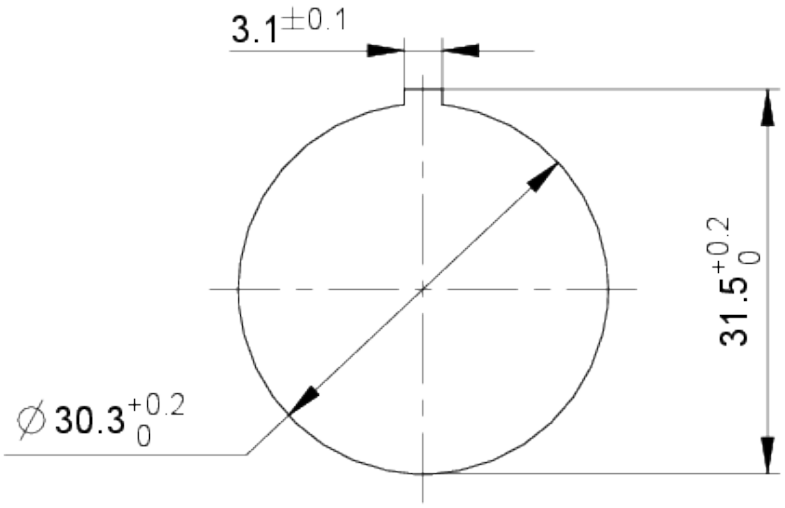

The information in this data sheet only contains general descriptions and / or performance features, which may not apply precisely as described to the respective application, and which my change due to further product enhancements. The technical data, illustrations and other information about our products are the mere results of individual technical testing. These descriptions and other product features are only binding if they expressly agreed upon at the time of the conclusion of a binding contract. In all other cases, we reserve the right to make technical changes as well as changes of availability. Pictures and other graphic illustrations are approximations only. All product names may be trademarks or brand names of the RAFI Group or any other sub-supplier of RAFI. The use of such by any third parties for their own purposes may infringe the rights of the respective entity holding those rights.

RAFI GmbH & Co. KG

Ravensburger Str. 128-134
88276 Berg / Ravensburg
Germany
www.rafi-group.com,
info.headquarters@rafi-group.com