Rolled knuckle continuous hinge - 30 mm width

Model : 42-1-3950



Opening angle 270°. Other lengths and pin materials are available on request.
Specific drilling requirements are also available on request.

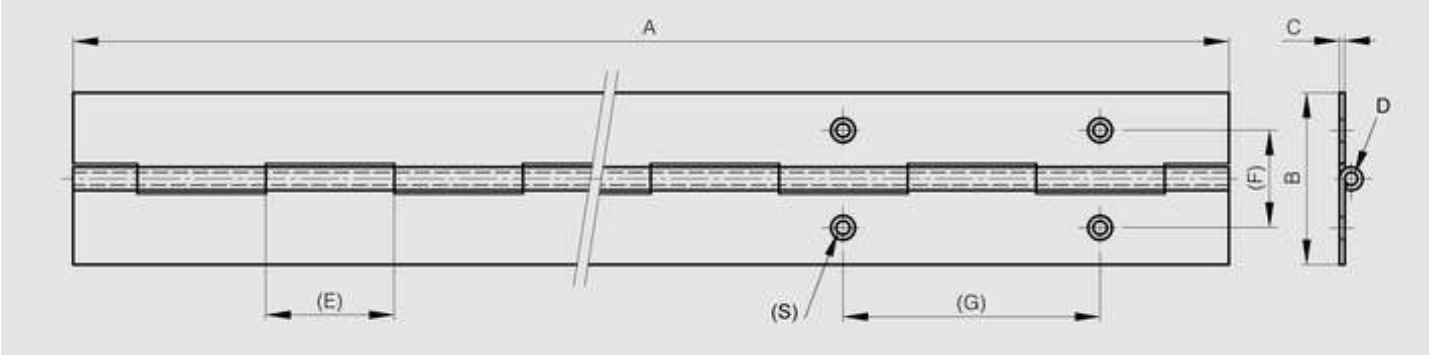

© PINET INDUSTRIE 2014

Material	304 stainless steel
Finish	raw
A (length)	1995
D (pin diameter)	4
B (width)	30
C	1.5
E	30
Weight (g)	1283
Opening angle	270
Note	undrilled
Material	stainless steel
Functions	continuous hinges
Pin material	stainless steel

© PINET INDUSTRIE 2014