LPXLFB6

LED integrated lamp-holder, flashing light Ø22MM Platinum series, screw termination, 18...30VAC/DC. Blue



Product designation			LED elements steady light
Product type designation			LPXLF
General characteristics			
Colour			Blue
Electrical characteristics			
Supply voltage (AC)		V	18…30
Supply voltage (DC)		V	18…30
Operations			
Electrical life		hours	100000
Mechanical features			
Tightening torque for terminals max		Nm	1
Conductor section			
AWG/kcmil conductor section			
	max		12
IEC			
	max	mm²	1 or 2 / 2.5
Mounting adapter			LPXAU120
Weight		g	16
Ambient conditions			
Temperature			
Operating temperature			
	min	°C	-25
	max	°C	+70
Storage temperature			
	min	°C	-40
	max	°C	+85
Dimensions			

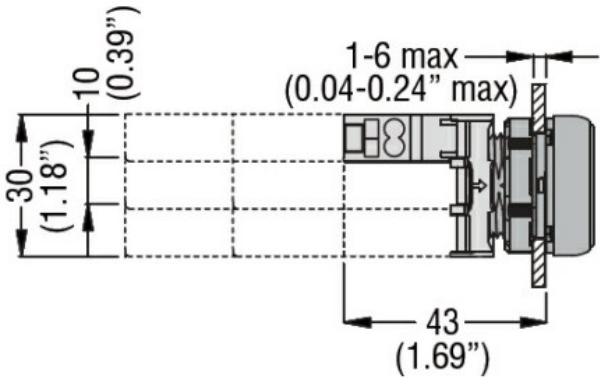

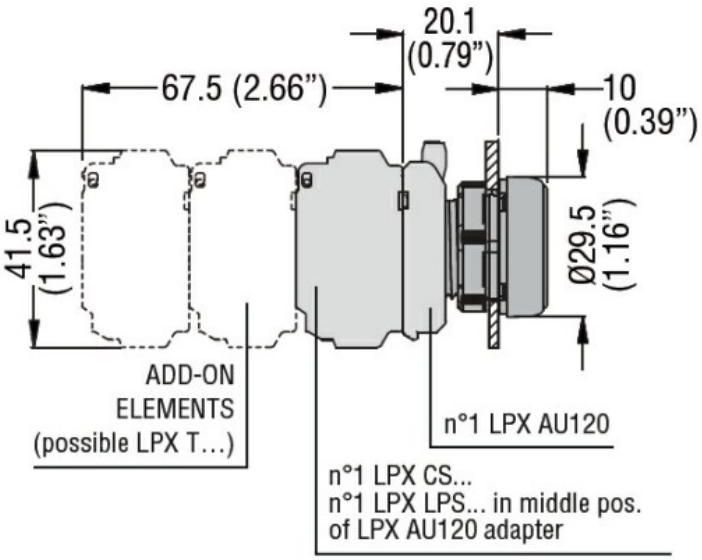

The characteristics described in this document are subject to updates or modifications at any time. The descriptions, technical and functional information, illustrations and instructions in this brochure are purely illustrative, and are consequently not contractually binding

LPXLFB6

LED integrated lamp-holder, flashing light Ø22MM Platinum series, screw termination, 18...30VAC/DC. Blue

Wiring diagrams

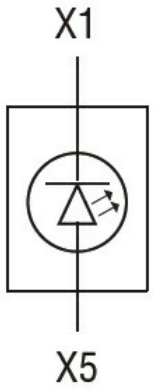

Certifications and compliance

Compliance

CSA C22.2 n° 14
IEC/EN/BS 60947-1
IEC/EN/BS 60947-5-1
UL508

Certificates

CCC
cULus
EAC
RINA
UL

ETIM classification

ETIM 8.0	EC000204 - Lamp holder block for control circuit devices

The characteristics described in this document are subject to updates or modifications at any time. The descriptions, technical and functional information, illustrations and instructions in this brochure are purely illustrative, and are consequently not contractually binding