- **Port size G1/2 ... G1**
- **Ported regulators for general purpose and high flow pneumatic applications**
- **Large diaphragm provides accurate and quick response to changing flow demands and line pressure**
- **Balanced valve minimizes effect of variations in inlet pressure on outlet pressure**
- **Extensive range of applications**



## Technical features

**Medium:**
Compressed air only
**Maximum inlet pressure:**
28 bar (406 psi) max.
**Pressure range:**
0,1 ... 3,5 bar (1 ... 50 psi),
0,2 ... 8 bar (3 ... 116 psi)
0,7 ... 17 bar (10 ... 246 psi)
(1/2" version only)

**Port sizes:**
1/2", 3/4" or 1"
**Gauge port:**
1/8 PTF with PTF main ports
Rc1/8 with ISO G main ports

**Ambient/Media temperature:**
-20 ... +80°C (-4 ... +176 °F)
Version with gauge:
-20° ... +65°C (-4° ... +149°F)
Air supply must be dry enough to avoid ice formation at temperatures below +2°C (+35 °F)

**Materials:**
Body: Zinc alloy
Bonnet: Aluminium alloy
Bottom plug: Glass filled nylon for G 1/2, aluminium for G 3/4 and G 1
Adjusting screw: Steel-plated
Elastomers: Synthetic rubber

## Technical data, standard models

| Symbol | Port size | Pressure range (bar) | Flow * ($dm^3/s$) | Relieving | Adjustment | Weight (kg) | Model |
|---|---|---|---|---|---|---|---|
|  | G1/2 | 0,1 ... 3,5 | 60 | Standard | T-bar | 1,40 | 20AG-X4G-PD100 |
| | G1/2 | 0,2 ... 8 | 60 | Standard | T-bar | 1,30 | 20AG-X4G-PH100 |
| | G1/2 | 0,7 ... 17 | 60 | Standard | T-bar | 1,30 | 20AG-X4G-PJ100 |
| | G3/4 | 0,1 ... 3,5 | 80 | Standard | T-bar | 2,75 | 20AG-X6G-PD100 |
| | G3/4 | 0,2 ... 8 | 80 | Standard | T-bar | 2,85 | 20AG-X6G-PH100 |
| | G1 | 0,1 ... 3,5 | 100 | Standard | T-bar | 2,44 | 20AG-X8G-PD100 |
| | G1 | 0,2 ... 8 | 100 | Standard | T-bar | 2,90 | 20AG-X8G-PH100 |

Typical flow with 7 bar inlet pressure, 4 bar set pressure and 1 bar droop from set.

## Option selector

**20AG-★★G-★★1★★**

| Diaphragm | Substitute |
|---|---|
| Relieving (standard) | X |
| Non-relieving - (no digit) | |

| Port size | Substitute |
|---|---|
| 1/2" | 4 |
| 3/4" | 6 |
| 1" | 8 |

| Options *2) | Substitute |
|---|---|
| T-bar handle (standard) | 00 |
| Panel mounted with plastic handwheel, 1/2" only | 03 |

| Pressure ranges *1) | Substitute |
|---|---|
| 0,1 ... 3,5 bar | D |
| 0,2 ... 8 bar | H |
| 0,7 ... 17 bar, 1/2" only | J |

| Thread form | Substitute |
|---|---|
| PTF | A |
| ISO G parallel | P |

*1) Outlet pressure can be adjusted to pressures in excess of, and less than, those specified. Do not use these units to control pressures outside of the specified ranges.

*2) Other seals or use other gases might be possible - please contact Norgren



Our policy is one of continued research and development. We therefore reserve the right to amend, without notice, the specifications given in this document. (1998 - 8143c) © 2015 Norgren Inc.

## Flow characteristics

**Inlet pressure: 10 bar, port size: 1/2”**
**Range: 0,2 ... 8 bar**

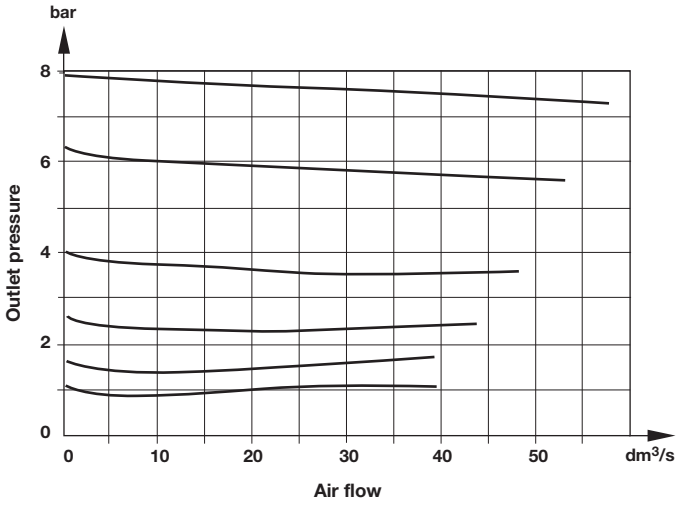


**Inlet pressure: 10 bar, port size: 1”**
**Range: 0,2 ... 7 bar**

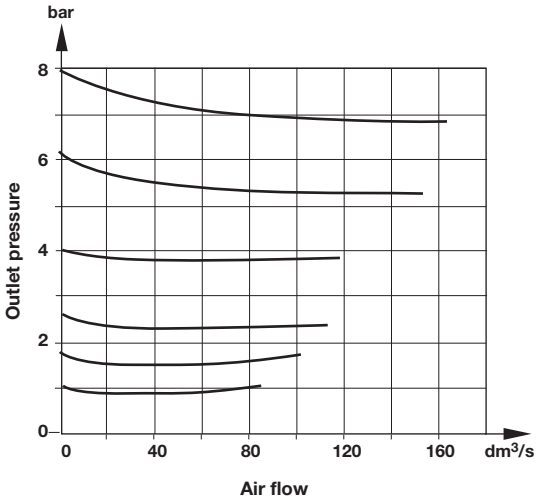


## Accessories




## Accessories

**Wall mounting bracket**

1



| Port size | |
|---|---|
| G 1/2 | 18-001-005 |
| G 3/4 & G 1 | 18-001-029 |

## Service kits



| Model | |
|---|---|
| 20AG-X4G/**100 (relieving) | 20AG-X4-100 |
| 20AG-4G/**100 (non-relieving) | 20AG-4-100 |
| 20AG-X6G/**100 (relieving) | 20AG-X8-100 |
| 20AG-6G/**100 (non-relieving) | 20AG-8-100 |
| 20AG-X8G/**100 (relieving) | 20AG-X8-100 |
| 20AG-8G/**100 (non-relieving) | 20AG-8-100 |

## Gauges

**Center back connection, white face (full technical specification see datasheet 8.900.900)**

2



| Pressure range bar *1 | MPa | psi | Ø | Thread size | Model |
|---|---|---|---|---|---|
| 0 ... 4 | 0 ... 0,4 | 0 ... 58 | 50 mm | R1/8 | 18-013-011 |
| 0 ... 10 | 0 ... 1 | 0 ... 145 | 50 mm | R1/8 | 18-013-013 |
| 0 ... 25 | 0 ... 2,5 | 0 ... 362 | 50 mm | R1/8 | 18-013-014 |

*1) primary scale

**Center back connection, black face for North America (full technical specification see datasheet 8.900.900)**

2



| Pressure range psig *1 | bar | MPa | Ø | Thread size | Model |
|---|---|---|---|---|---|
| 0 ... 60 | 0 ... 4 | 0 ... 0.4 | 2” (50 mm) | 1/8 NPT | 18-013-202 |
| 0 ... 160 | 0 ... 11 | 0 ... 1.1 | 2” (50 mm) | 1/8 NPT | 18-013-204 |
| 0 ... 400 | 0 ... 28 | 0 ... 2.8 | 2” (50 mm) | 1/8 NPT | 18-013-206 |

*1) primary scale


Our policy is one of continued research and development. We therefore reserve the right to amend, without notice, the specifications given in this document. (1998 - 8143c) © 2015 Norgren Inc.

## Dimensions
### Standard version

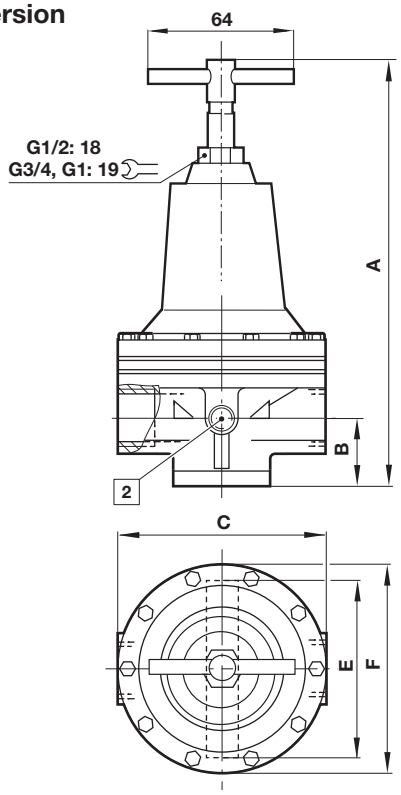


2 Gauge port

## Bracket mounting

Dimensions in mm
Projection/First angle

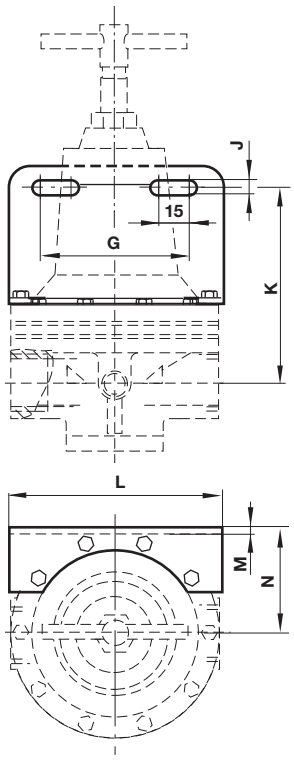


| Port size | A | B | C | E | Ø F | P |
|---|---|---|---|---|---|---|
| G1/2 | 162 | 36 | 86 | 82 | 83 | 179 |
| G3/4 | 232 | 41 | 124 | 108 | 124 | 245 |
| G1 | 232 | 41 | 124 | 108 | 124 | 245 |

| Port size | G | J | K | L | M | N |
|---|---|---|---|---|---|---|
| G1/2 | 63 | 7 | 73 | 83 | 2 | 57 |
| G3/4 | 98 | 8 | 80 | 124 | 2 | 75 |
| G1 | 98 | 8 | 80 | 124 | 2 | 75 |

## Panel mounted with plastic handwheel, 1/2” only

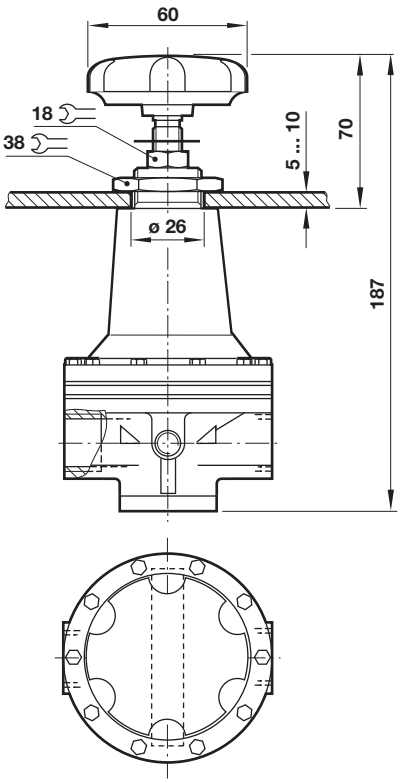




Our policy is one of continued research and development. We therefore reserve the right to amend, without notice, the specifications given in this document. (1998 - 8143c) © 2015 Norgren Inc.

## Warning

These products are intended for use in industrial compressed air systems only. Do not use these products where pressures and temperatures can exceed those listed under **»Technical features/data«**.
Before using these products with fluids other than those specified, for non-industrial applications, life-support systems or other applications not within published specifications, consult IMI NORGREN.

Through misuse, age, or malfunction, components used in fluid power systems can fail in various modes.

The system designer is warned to consider the failure modes of all component parts used in fluid power systems and to provide adequate safeguards to prevent personal injury or damage to equipment in the event of such failure.
System designers must provide a warning to end users in the system instructional manual if protection against a failure mode cannot be adequately provided.
System designers and end users are cautioned to review specific warnings found in instruction sheets packed and shipped with these products.


Our policy is one of continued research and development. We therefore reserve the right to amend, without notice, the specifications given in this document. (1998 - 8143c) © 2015 Norgren Inc.