Safety switch

Series SLK – with separate actuator

Description **SLK-F-UC-55-R2-A0-L0-0**	Article number **6018119061**

Position monitoring of guard locking
(not wired)

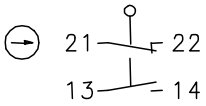

Termination electromagnet with contact position
E1, E2 without current

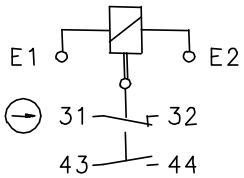

E1, E2 with current

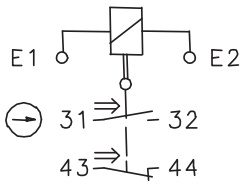

Operating diagram

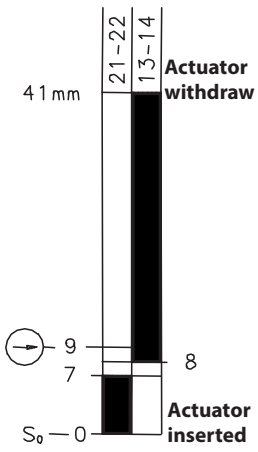



Tolerances:
Actuating force: ± 15 %

The actuator is not included in the scope of delivery. It can be ordered separately.

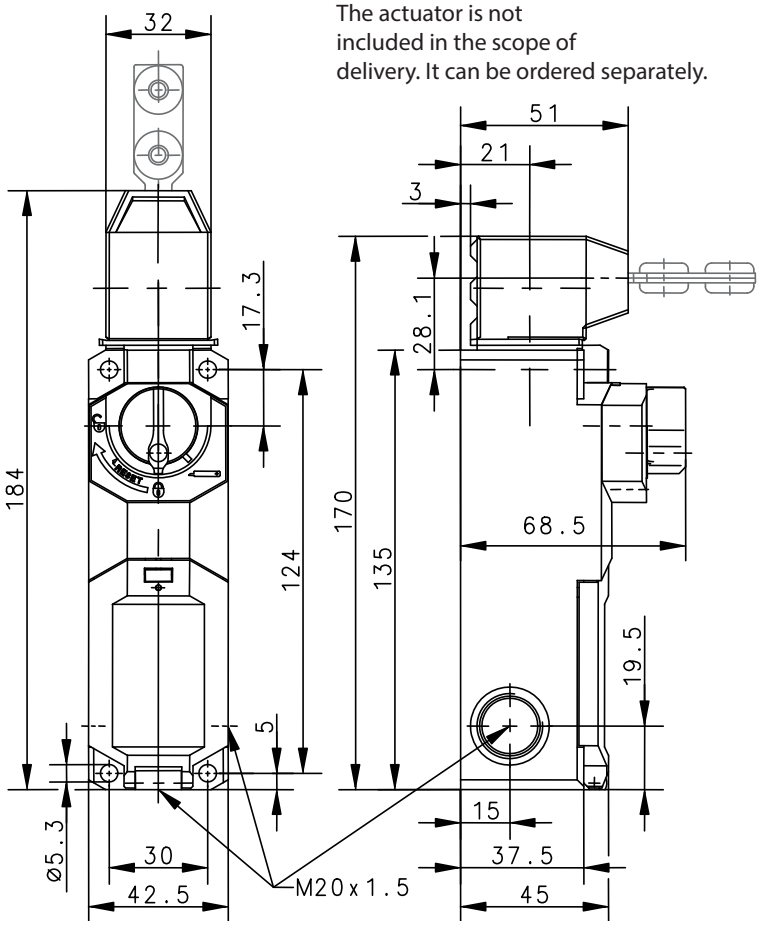

Electrical data		
Protection class		II, totally insulated
Contact elements		
Rated insulation voltage	U_i	250 V
Rated impulse withstand voltage	U_{imp}	2,5 kV
Conv. thermal current	I_{the}	5 A
Utilization category		AC-15, U_e / I_e 230 V / 2,5 A
Direct opening action	⊖	according to IEC/EN 60947-5-1, Annex K
Short-circuit protective device		4 A gG
Electro magnets		
Duty cycle		100 % ED (at E1; E2)
Temperature class		F (155 °C)
Inrush power consumption		12 VA (0,2 s)
Permanent power consumption		4,4 VA
Switch operations permanent		600 / h
Operating voltage		24 V AC / DC

Mechanical data		
Enclosure		Thermoplastic, glass fibre reinforced (UL 94-V0)
Cover		Thermoplastic, glass fibre reinforced (UL 94-V0)
Actuating head		Thermoplastic, glass fibre reinforced / Zn-GD
Actuator		Separate actuator (Steel / PA)
Minimum actuating radius	R_{min}	see separate actuators data sheet
Velocity for actuating	V_{max}	0,5 $^m/_s$
Extraction force		≥ 27 N
Interlocking principle		Spring force
Unlocking		a) magnetic force b) emergency release from the front
Hold on force	F_{Zh}	≤ 1500 N acc. to GS-ET-19
Ambient air temperature		-25 ° C ... +70 ° C
Contact type		2 NC, 2 NO
Switching principle		4 slow make and break contact elements
Mechanical life		1 x 10^6 switching cycles (at max. 600 switch operations / h)
Assembly		4 x M5
Connection		Spring-clamp connection
Conductor cross-sections		0,5 ... 1,5 mm^2 flexible
Cable entrance		3 x M20 x 1,5
Weight		≈ 0,36 kg
Installation position		operator definable
Protection type		IP67 acc. to IEC/EN 60529

ID for safety engineering	
B10d	2 x 10^6 switching cycles

Anfahrmöglichkeiten
4 different actuating directions achievable by rotating the actuating head. Changing between horizontal and vertical actuating direction by setting the actuating head in the requested direction.

Standards	
	VDE 0660 T100, DIN EN 60947-1, IEC 60947-1
	VDE 0660 T200, DIN EN 60947-5-1, IEC 60947-5-1
	GS-ET-19
	DIN EN ISO 13849-1

EU Conformity	
	acc. to directive 2006/42/EC

Approvals	
	DGUV
	$_{c}CSA_{US}$ B300 (same polarity)
	CCC

Notes
The degree of protection (IP code) specified applies solely to a property closed cover and the use of an equivalent cable gland with adequate cable. The switch may not be used as a mechanical stop. When power is removed from the electromagnet (solenoid) the safety guard will be in locked position. The emergency release function is activated by rotating the rotary handle 90° clockwise. The supplied key is necessary to reset the emergency release function.

Technical modifications and errors excepted.
The technical datasheet corresponds to the technical state as of 2015-07-28 and will not be removed in case of changes.