Ecocal

thermostatic radiator valves





altecnic

Ecocal thermostatic radiator valves

Design

The Altecnic range of radiator valves are of durable construction giving dependable performance for building services and domestic applications.

Their aesthetic design satisfies the requirements of modern commercial buildings and domestic interiors.

Chrome plated bodies with white thermostatic controllers and lockshield covers give an unobtrusive appearance and complements most decors.

For more stylistic modern decors valves are available with chrome finish thermostatic controllers and lockshield covers.

The inlet connection of the valve body is either compression or push fit for use with copper tube.

Supplied with manual cap for stem protection and manual isolation.

Altecnic thermostatic radiator valves are BS EN 215 certified.

Thermostatic Radiator Valves - TRV

Thermostatic radiator valves are typically used for regulating the flow to radiators of central heating systems. They can also be used with a remote sensor to control the flow to heated ceilings and fancoils.

The thermostatic controller contains a liquid filled element which automatically controls the opening of the valve to keep the ambient temperature of the room at the set temperature.

This prevents temperature fluctuations in the room and achieves considerable energy savings.

The thermostatic controller has a '0' setting which prevents flow but when positive isolation is required the manual cap must be used.

The frost setting prevents the radiator and pipework from freezing and causing damage from flooding to floor coverings and structural items.

Note: For the frost setting to operate the heating system must be switched on.

TRV Accessories



Remote sensor



Drain off tail piece



Remote transmitter



15mm plain tail x 10 mm push fit elbows

Materials of Construction

Body	Brass	BS EN 12164 CW617N
Union nut	Brass	BS EN 12164 CW617N
Tailpiece	Brass	BS EN 12164 CW614N
Olive	Brass	BS EN 12164 CW617N
Seals - 'O' rings	EPDM	
TRV insert assembly	Brass with EPDM disc facing	
Lockshield insert	Brass	BS EN 12164 CW614N
TRV controller cover	Thermoplastic	ABS (RAL 9010) ABS - chrome finish
Lockshield cap	Thermoplastic	ABS (RAL 9010) ABS - chrome finish
Body finish	Chrome Plated	

Technical Specification

Max. working pressure (static):	10 bar
Max. temperature:	100 °C
Medium:	water, glycol solution
Max percentage of glycol:	30%

TRV Specification

Max. differential pressure:	1 bar*
Scale of adjustment:	0 to V
Temperature range:	0 to 28°C
Frost setting:	7°C
Max. ambient temperature:	50°C

Liquid filled element

Positive isolation

* the ecocal is only suitable for use as a reverse flow valve when the differential pressure across the valve does not exceed 0.3 bar.

TRV Accessories

A range of accessories are available to compliment the Altecnic radiator valve range, to suit site conditions or applications.

- Remove sensor with 2m capillary - used when the thermostatic head is situated behind curtains or furniture.

  Product Code: 2m 201000

- Remote transmitter with 2m capillary - the thermostatic element is mounted away for the valve body which may be concealed or in the ceiling space.

  Product Code: 2m 472000

- Radiator drain off tail piece

  Product Code: YU-JQAL213HC

- Tamperproof guard - for addition securing between the valve body and thermostatic head.

  Product Code: CA-100793

Ecocal thermostatic radiator valves



Prod Code	Description
CA-200428MS	ecocal 8 mm angled TRV
200420 LTC	ecocal 10 mm angled TRV
200425 LTC	ecocal 15 mm angled TRV
CA-200455	ecocal 15 mm angled TRV with high chrome head



Prod Code	Description
CA-201010	ecocal 10 mm straight TRV
200465 LTC	ecocal 15 mm straight TRV
CA-201013	ecocal 10 mm straight TRV with high chrome head
CA-201011	ecocal 15 mm straight TRV with high chrome head

Dimensions

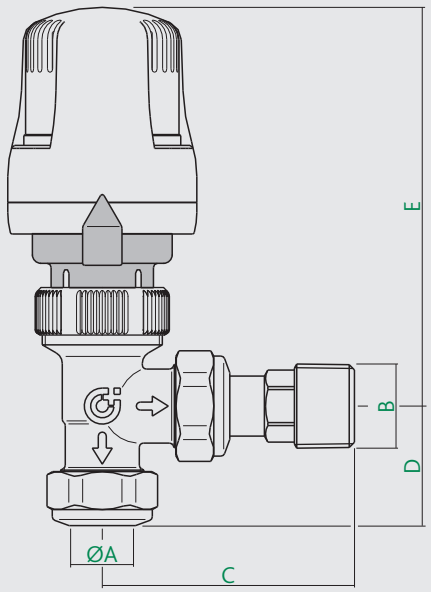

Prod Code	A	B	C	D	E
CA-200428MS	8	R½	55 to 63	29.5	100
200420 LTC	10	R½	55 to 63	30	100
200425 LTC	15	R½	55 to 63	30	100
CA-200455	15	R½	55 to 63	30	100

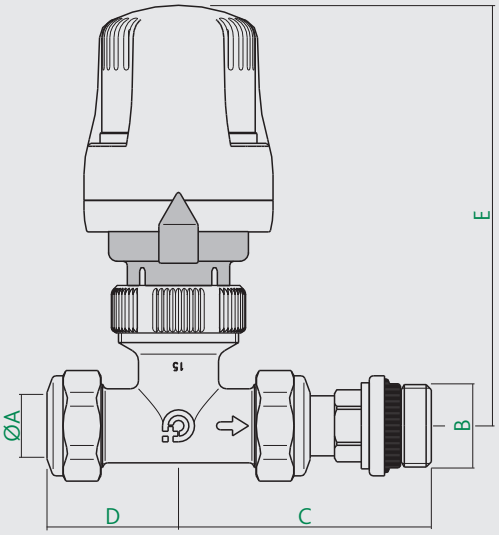

Prod Code	A	B	C	D	E
CA-201010	10	R½	57 to 64	33	104
200465 LTC	15	R½	57 to 64	33	104
CA-201013	10	R½	57 to 64	33	104
CA-201011	15	R½	57 to 64	33	104

Ecocal thermostatic radiator valves

Ecocal twin packs



Prod Code	Description
200440 LTC	ecocal 10 mm angled twin pack
200445 LTC	ecocal 15 mm angled twin pack
CA-200456	ecocal 10 mm angled twin pack with high chrome head
200455 LTC	ecocal 15 mm angled twin pack with high chrome head



Prod Code	Description
CA-200478	ecocal 10 mm straight twin pack
200475 LTC	ecocal 15 mm straight twin pack
CA-200477	ecocal 10 mm straight twin pack with high chrome head
200485 LTC	ecocal 15 mm straight twin pack with high chrome head
CA-200510	ecocal 15 mm straight twin pack with high chrome head complete with angled 10 mm push fit elbows

Prod Code	Description
200405 LTC	ecocal 15 mm angled twin pack push fit

Dimensions

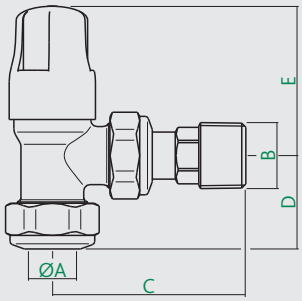

Twin pack Prod Code	Lockshield valve dimensions				
	A	B	C	D	E
200440 LTC	10	R½	54 to 62	26.5	48
200445 LTC	15	R½	54 to 62	27	48
CA-200456	10	R½	54 to 62	26.5	48
200455 LTC	15	R½	54 to 62	27	48

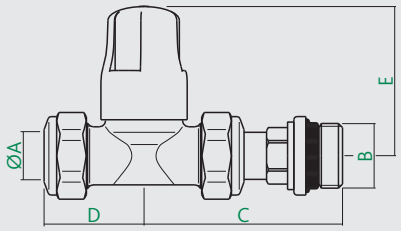

Twin pack Prod Code	Lockshield valve dimensions				
	A	B	C	D	E
CA-200478	10	R½	54 to 62	33	48
200475 LTC	15	R½	54 to 62	33	48
CA-200477	10	R½	54 to 62	33	48
200485 LTC	15	R½	54 to 62	33	48

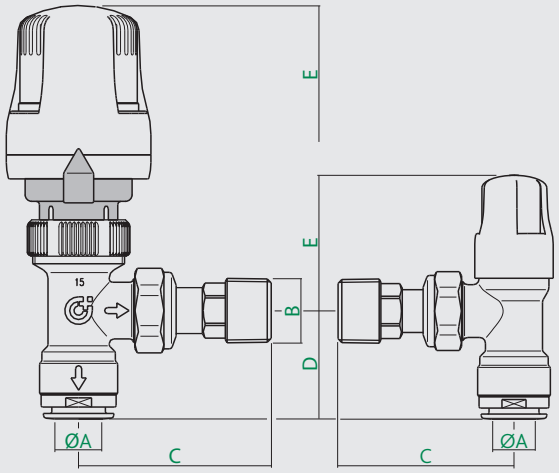

200405 LTC	A	B	C	D	E
TRV	15	R½	55 to 63	38	100
Lockshield	15	R½	55 to 63	38	48

E & O.E

Altecnic Ltd Mustang Drive, Stafford, Staffordshire ST16 1GW
T: +44 (0)1785 218200 E: sales@altecnic.co.uk
Registered in England No: 2095101

altecnic.co.uk

AL 028 06-12-11