Brand of NTN corporation

Technical data

UCP313

Bearing units



Grey cast housing, radial insert ball bearing with socket set screws,seal with slinger

KIT CONTENT

UC313G2, P313

VISUAL (S)

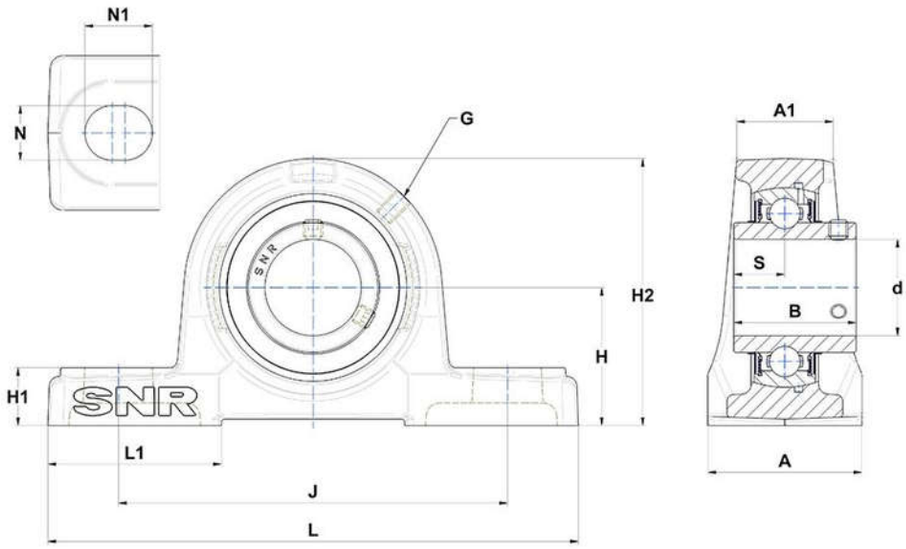

PRODUCT DEFINITION

Brand	SNR
A - Housing width	90 mm
A1 - Housing top width	57 mm
B - Width of Inner Ring	75 mm
d - Shaft diameter	65 mm
G - Grease fitting	M6x1

PRODUCT DEFINITION	
H - Distance mounting base to centerline spheric. seating diam.	90 mm
H1 - Housing foot height	33 mm
H2 - Housing height	176 mm
J - Mounting holes distance	260 mm
L - Housing length	340 mm
L1 - Housing foot length	105 mm
N - Mounting hole dimension	25 mm
N1 - Mounting hole length	38 mm
S - Distance front side/bearing centre	30 mm

PRODUCT PERFORMANCE	
C - Dynamic load rating	93860000 mN
C0 - Static load rating	60500000 mN
Operating temperature min.	253,15 °K
Operating temperature max.	373,15 °K

OTHER FEATURES	
Mass	11,15 kg
Recommended tightening torque for set screw	33 N-m