LPCSL1208

Illuminated selector switch actuator Ø22mm Platinum series chromed plastic, 2 position, 0 - 1. White



Product designation			Illuminated selector switch actuator - 2 position
Product type designation			LPCSL12
General characteristics			
Colour			White
Type of positions			0 - 1
Material			Polyamide
IEC degree of protection			IP66, IP67 and IP69K
Mechanical features			
Mechanical life		cycles	1000000
Fixing			Without mounting adapter
Mounting adapter			LPXAU120
Weight		g	25
UL technical data			
UL degree of protection			Type1, 2, 3R, 4, 4X, 12, 12K
Ambient conditions			
Temperature			
	Operating temperature		
	min	°C	-25
	max	°C	+70
	Storage temperature		
	min	°C	-40
	max	°C	+85

Dimensions

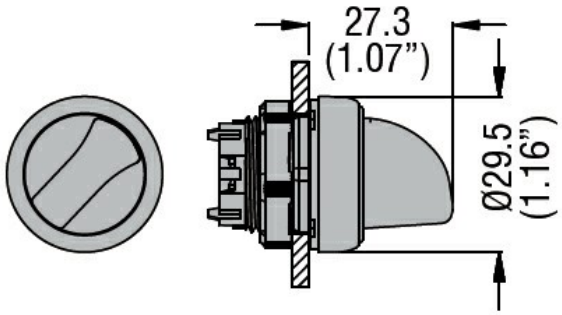

Certifications and compliance

Compliance	
	CSA C22.2 n° 14
	IEC/EN/BS 60947-1
	IEC/EN/BS 60947-5-1
	UL508
Certificates	

The characteristics described in this document are subject to updates or modifications at any time. The descriptions, technical and functional information, illustrations and instructions in this brochure are purely illustrative, and are consequently not contractually binding

LPCSL1208

Illuminated selector switch actuator Ø22mm Platinum series chromed plastic, 2 position, 0 - 1. White

	CCC
	cULus
	EAC
	RINA

ETIM classification

ETIM 8.0	EC000222 - Front element for selector switch

The characteristics described in this document are subject to updates or modifications at any time. The descriptions, technical and functional information, illustrations and instructions in this brochure are purely illustrative, and are consequently not contractually binding