PRODUCT DETAILS

ARTICLE: 15712GFRHB

WHEEL DG 125X37,5 NYLON BEARING BOLT HOLE F.12 FORK X20/40 + BRAKE



Wheel series DG

Wheels with elastic grey rubber ring on a thermoplastic core, with standard or stainless steel roller bearings or nylon friction bearings. The wheel is fitted with bushes.

Castor series INOX20

Inox20 series, polished stainless steel forks, swivels with double ball races.
Trailing foot brake - total stop.
Sigle bolt hole fixing for bolt diam. 10-12 mm.

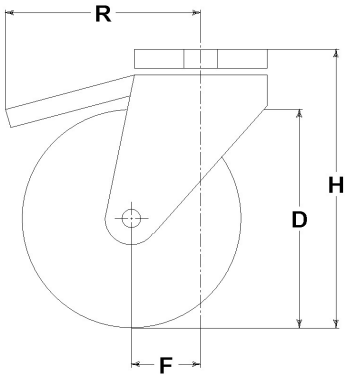

Technical data

Wheel diameter	D	125 mm
Tyre width	E	37,5 mm
Bore diameter	d	12 mm
Weight article		1,000 kg
Hub width	L	40 mm
Overall height	H	153 mm
Fixing bolt diameter	g	M10-12
Offset	F	40 mm
Fork width	U	40 mm
Load Capacity		110 kg

Related Articles

Spare part wheel: 13112G
Basic version: 15712GHB

GENERAL INFORMATION / RECOMMENDATIONS AND WARNINGS
The cited text and the complete catalogue in their most up-dated versions are available in the OEM's website page www.lagspa.it/downloads. The dimensions, descriptions, specifications and illustrations herein are indicative and subject to variations without notice. The fact that products are illustrated herein does not necessarily imply they are available from stock nor does it place us under any obligation to supply them.
Tests carried out refer to the original products with original accessories: the replacement of one of the components with others of different manufacture might prevent the same results from being achieved and will automatically invalidate any guarantee. Please contact our technical service concerning any special application.