THE INFORMATION CONTAINED IN THIS DRAWING IS THE SOLE PROPERTY OF RULAND MANUFACTURING CO, INC ANY REPRODUCTION IN PART OR WHOLE WITHOUT THE WRITTEN PERMISSION OF RULAND MANUFACTURING CO, INC IS PROHIBITED.

REVISIONS			
REV.	DESCRIPTION	DATE	APPROVED

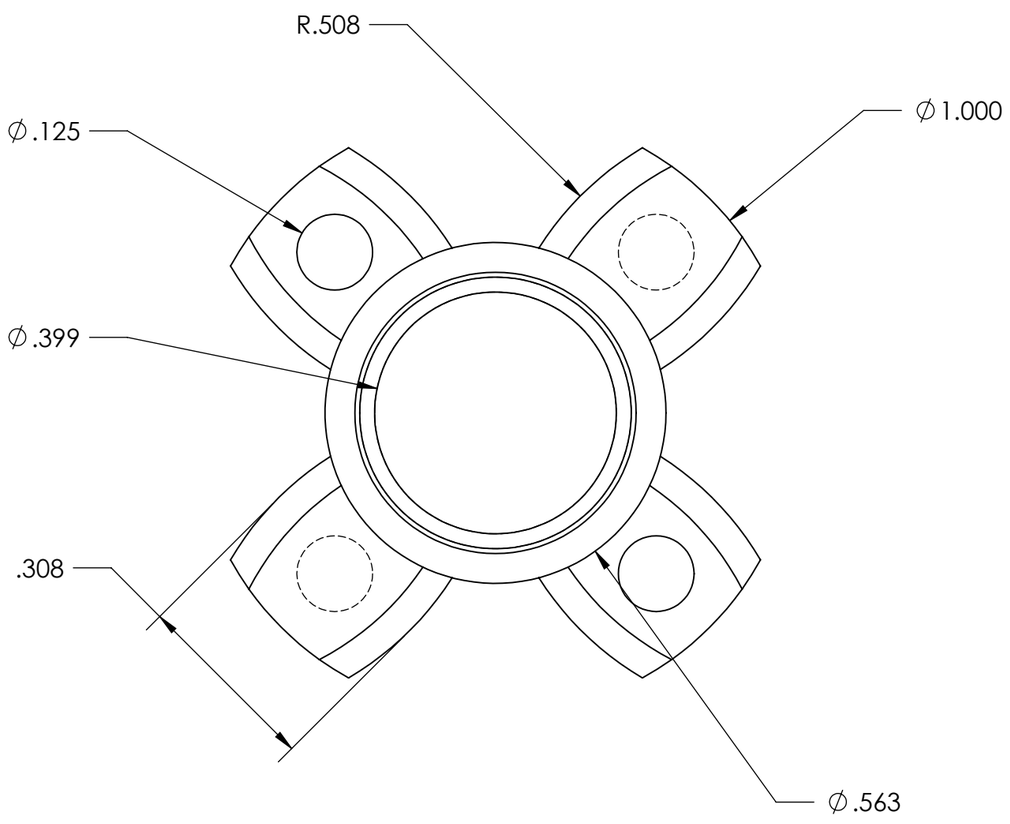

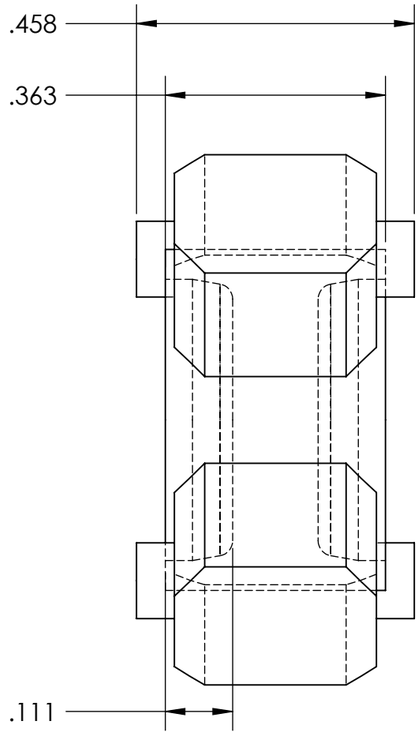

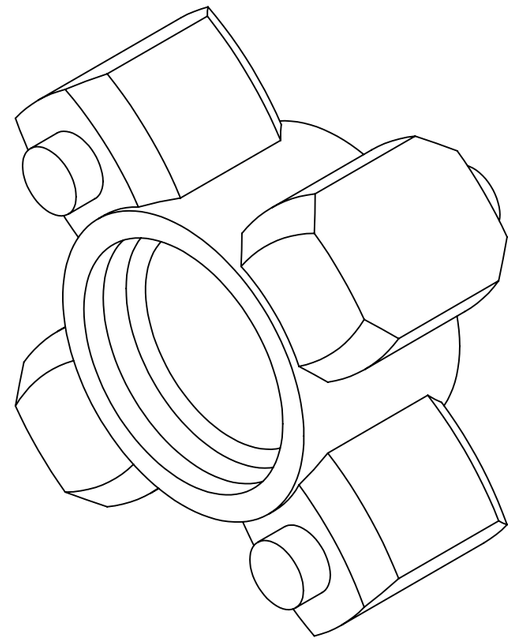

ITEM NO.	PART OR IDENTIFYING NO.	NOMENCLATURE OR DESCRIPTION	MATERIAL SPECIFICATION	QTY REQD

PARTS LIST

THIRD ANGLE PROJECTION

UNLESS OTHERWISE SPECIFIED BREAK ALL EDGES .010 x 45°

NEXT ASSY	USED ON
APPLICATION	

UNLESS OTHERWISE SPECIFIED DIMENSIONS ARE IN INCHES
TOLERANCES ARE:
FRACTIONS ±1/64" DECIMALS .XX ± .01 .XXX ± .005 .XXXX ± .0010 ANGLES ±0.5

MATERIAL

FINISH

DO NOT SCALE DRAWING

CAD GENERATED DRAWING, DO NOT MANUALLY UPDATE

APPROVALS	DATE
DRAWN SEB	9/4/2008
CHECKED	
RESP ENG SEB	1/10/00
MFG ENG	
QUAL ENG	

RULAND
Carefully Made Shaft Collars and Couplings
6 Hayes Memorial Drive
Marlborough, MA 01752
www.ruland.com

SIZE B | DWG. NO. JD16-25 | REV.

SCALE 4:1 | CAD FILE: | SHEET 1 OF 1