Up to PL e of EN ISO 13849-1
PNOZ X10



Safety relay for monitoring E-STOP pushbuttons, safety gates and light beam devices

Approvals

	PNOZ X10
c UL us LISTED	◆
TÜV SÜDDEUTSCHLAND	◆
CCC	◆

Unit features

- Positive-guided relay outputs:
  - 6 safety contacts (N/O), instantaneous
  - 4 auxiliary contacts (N/C), instantaneous
- Connection options for:
  - E-STOP pushbutton
  - Safety gate limit switch
  - Reset button
  - Light barriers
- LED indicator for:
  - Switch status channel 1/2
  - Supply voltage
- See order reference for unit types

Unit description

The safety relay meets the requirements of EN 60947-5-1, EN 60204-1 and VDE 0113-1 and may be used in applications with

- E-STOP pushbuttons
- Safety gates
- Light beam devices

Safety features

The relay meets the following safety requirements:

- The circuit is redundant with built-in self-monitoring.
- The safety function remains effective in the case of a component failure.
- The correct opening and closing of the safety function relays is tested automatically in each on-off cycle.
- The tranformer is short circuit-proof. An electronic fuse is used on a DC supply.

Block diagram

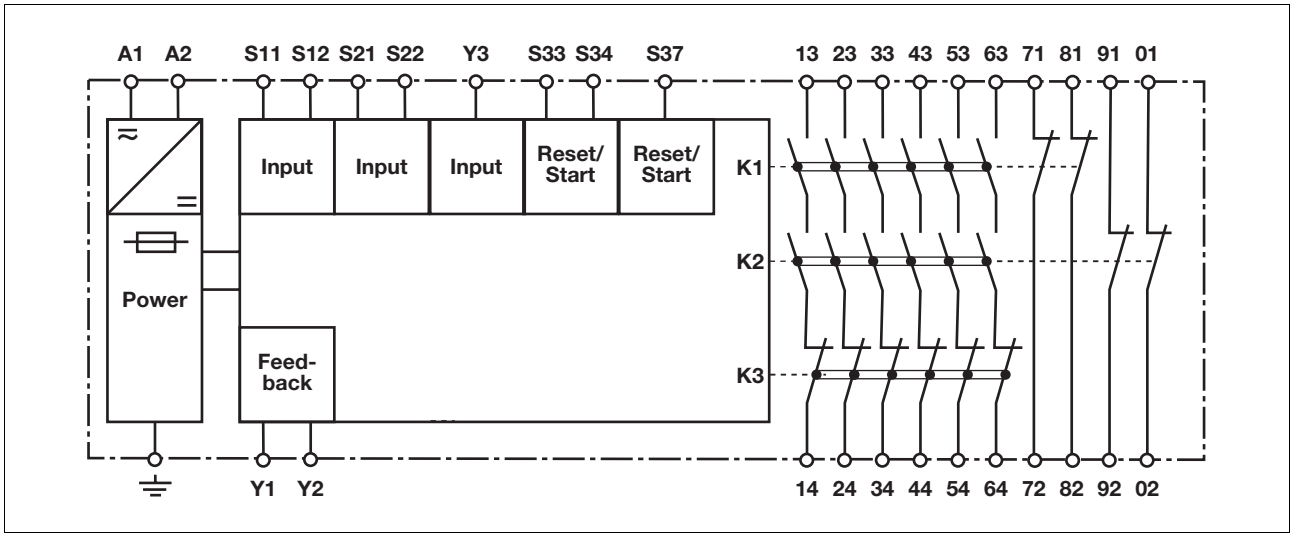

Up to PL e of EN ISO 13849-1
PNOZ X10

Function description

- Single-channel operation (only with U_B 24 VAC/DC): no redundancy in the input circuit, earth faults in the reset and input circuit are detected.
- Dual-channel operation without detection of shorts across contacts: redundant input circuit, detects
  - earth faults in the reset and input circuit,
  - short circuits in the input circuit and, with a monitored reset, in the reset circuit too.
- Dual-channel operation with detection of shorts across contacts: redundant input circuit, detects
  - earth faults in the reset and input circuit,
  - short circuits and shorts between contacts in the input circuit.
- Automatic start: Unit is active once the input circuit has been closed.
- Manual reset: Unit is active once the input circuit is closed and then the reset circuit is closed.
- Monitored reset: Unit is active once
  - the input circuit is closed and then the reset circuit is closed and opened again.
  - the reset circuit is closed and then opened again once the input circuit is closed.
- Increase in the number of available instantaneous safety contacts by connecting contact expansion modules or external contactors.

Timing diagram

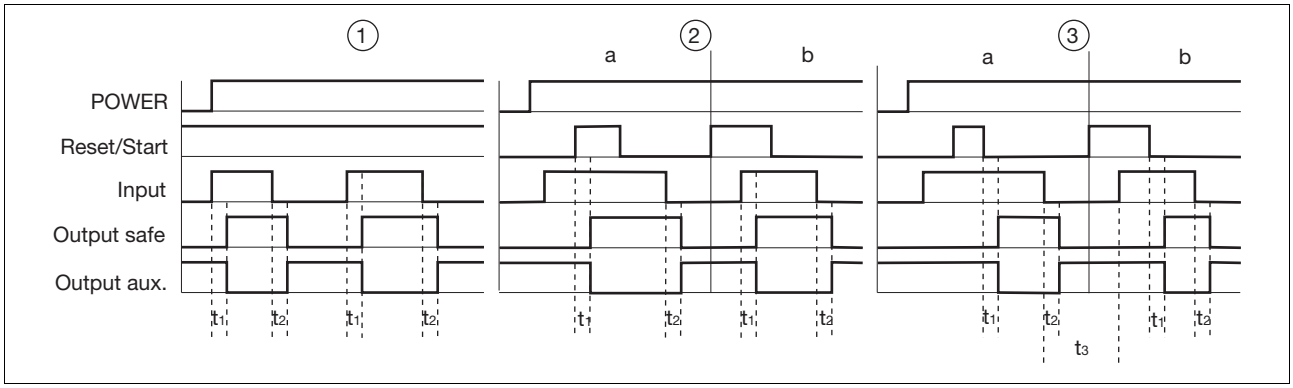

Key

- Power: Supply voltage
- Reset/Start: Reset circuit S33(S12)-S34
- Input: Input circuits S12-Y3, S21-S22
- Output safe: Safety contacts 13-14, 23-24, 33-34, 43-44, 53-54, 63-64
- Output aux: Auxiliary contacts 71-72, 81-82, 91-92, 01-02
- ①: Automatic reset
- ②: Manual reset
- ③: Monitored reset
- a: Input circuit closes before reset circuit
- b: Reset circuit closes before input circuit
- t_1: Switch-on delay
- t_2: Delay-on de-energisation
- t_3: Recovery time

Wiring

Please note:

- Information given in the “Technical details” must be followed.
- Outputs 13-14, 23-24, 33-34, 43-44, 53-54, 63-64 are safety contacts, outputs 71-72, 81-82, 91-92, 01-02 are auxiliary contacts (e.g. for display).
- To prevent contact welding, a fuse should be connected before the output contacts (see technical details).
- Calculation of the max. cabling runs I_{max} in the input circuit:

$$I_{max} = \frac{R_{lmax}}{R_l / km}$$

R_{lmax} = max. overall cable resistance (see technical details)
R_l /km = cable resistance/km

- Use copper wire that can withstand 60/75 °C.
- Sufficient fuse protection must be provided on all output contacts with capacitive and inductive loads.

Pilz GmbH & Co. KG, Felix-Wankel-Straße 2, 73760 Ostfildern, Germany
Telephone: +49 711 3409-0, Telefax: +49 711 3409-133, E-Mail: pilz.gmbh@pilz.de

Up to PL e of EN ISO 13849-1
PNOZ X10

Preparing for operation

- Supply voltage

Supply voltage	AC	DC
	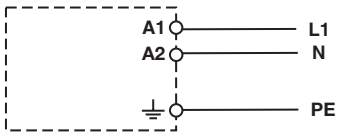	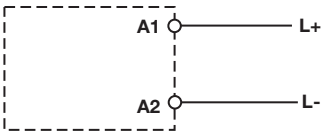

- Input circuit

Input circuit	Single-channel	Dual-channel
E-STOP **without** detection of shorts across contacts	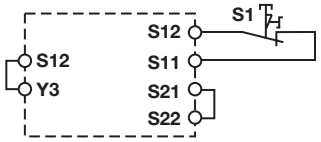	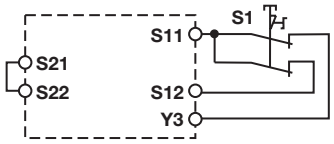
E-STOP **with** detection of shorts across contacts	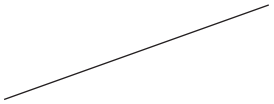	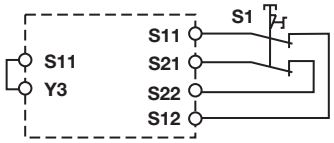
Safety gate **without** detection of shorts across contacts	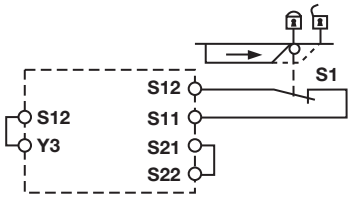	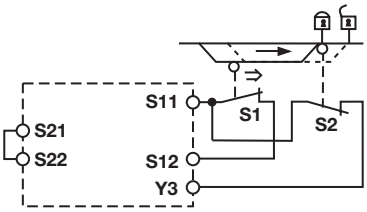
Safety gate **with** detection of shorts across contacts		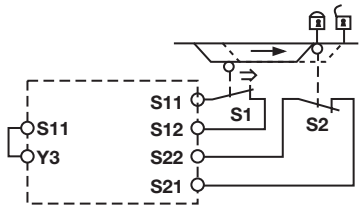

Up to PL e of EN ISO 13849-1
PNOZ X10

▸ Reset circuit

Reset circuit	E-STOP wiring (single-channel) Safety gate (single-channel)	E-STOP wiring (dual-channel) Safety gate (dual-channel)
Automatic reset		
Manual reset	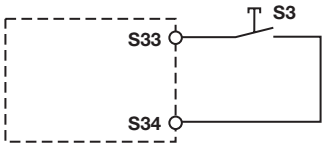	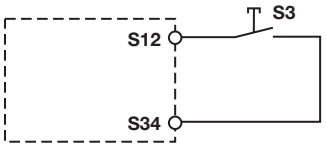
Monitored reset	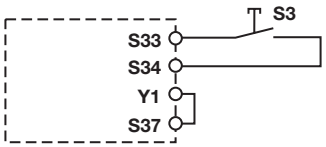	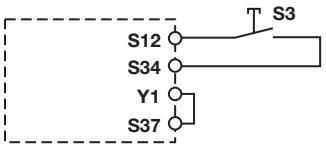

▸ Feedback loop

Feedback loop	Automatic reset	Monitored/manual reset
Contacts from external contactors	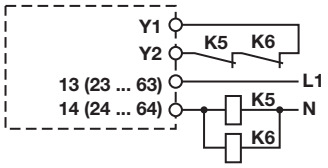	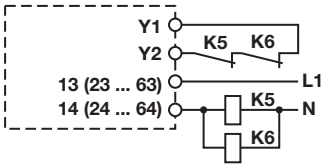

▸ Key

S1/S2	E-STOP/safety gate switch
S3	Reset button
	Switch operated
	Gate open
	Gate closed

Up to PL e of EN ISO 13849-1
PNOZ X10

Terminal configuration

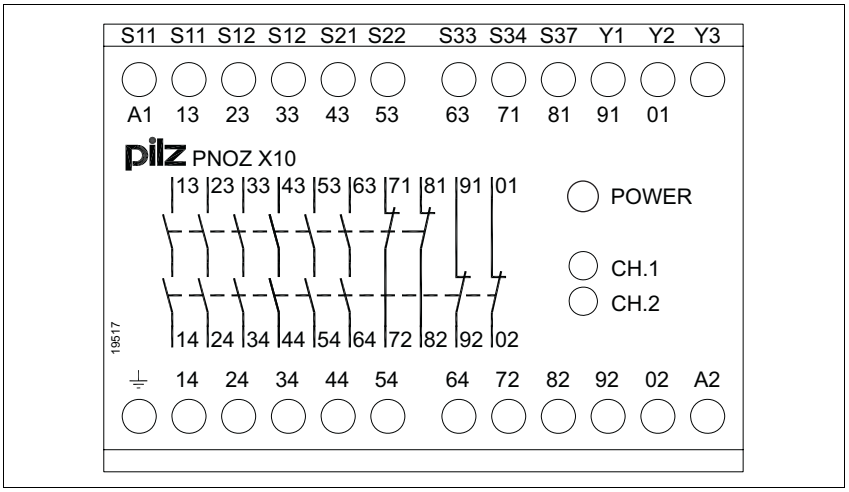

Installation

- The safety relay should be installed in a control cabinet with a protection type of at least IP54.
- Use the notch on the rear of the unit to attach it to a DIN rail.
- Ensure the unit is mounted securely on a vertical DIN rail (35 mm) by using a fixing element (e.g. retaining bracket or an end angle).

Dimensions

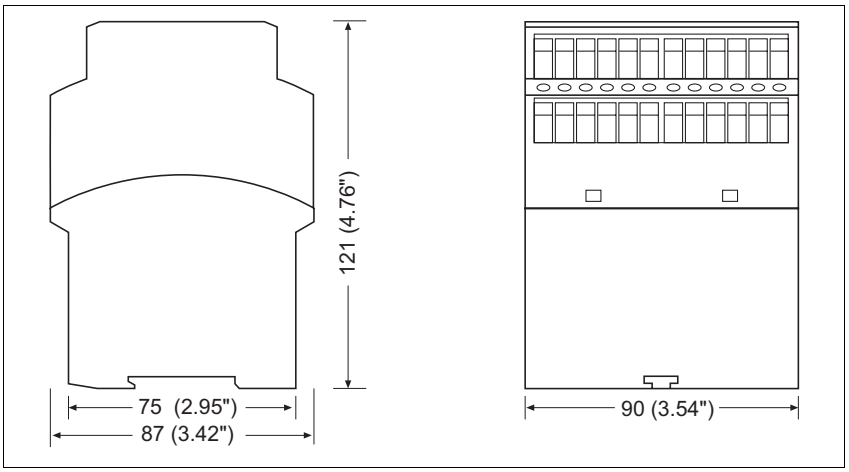

Up to PL e of EN ISO 13849-1
PNOZ X10

Notice

This data sheet is only intended for use during configuration. For installation and operation, please refer to the operating instructions supplied with the unit.

Service life graph

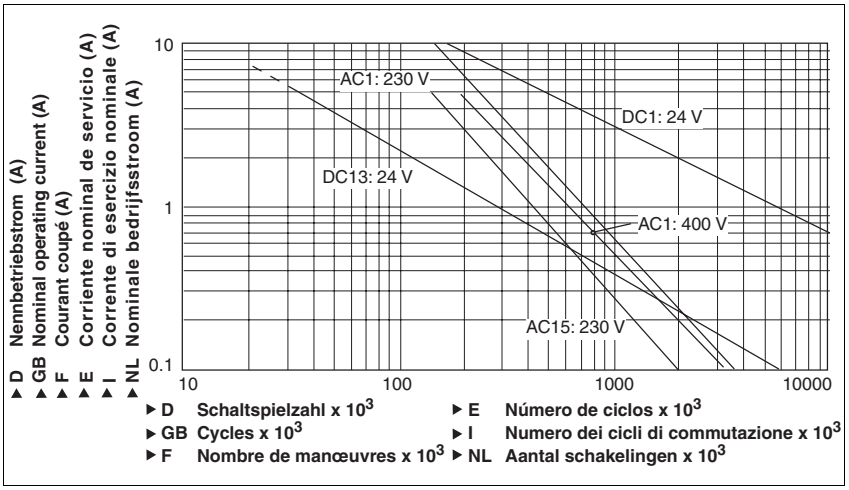

Technical details

Electrical data	
Supply voltage	
Supply voltage U_B AC	**24 V**, **42 V**, **110 - 120 V**, **230 - 240 V**
Supply voltage U_B DC	**24 V**
Voltage tolerance	**-15 %/+10 %**
Power consumption at U_B AC	**10.0 VA** No. 774700, 774701, 774703, 774706
Power consumption at U_B DC	**5.5 W** No. 774709
Frequency range AC	**50 - 60 Hz**
Residual ripple DC	**160 %**
Voltage and current at	
Input circuit DC: **24.0 V**	**50.0 mA**
Reset circuit DC: **24.0 V**	**100.0 mA**
Feedback loop DC: **24.0 V**	**100.0 mA**
Number of output contacts	
Safety contacts (S) instantaneous:	**6**
Auxiliary contacts (N/C):	**4**
Utilisation category in accordance with **EN 60947-4-1**	
Safety contacts: AC1 at **240 V**	I_{min}: **0.01 A** , I_{max}: **8.0 A** P_{max}: **2000 VA**
Safety contacts: AC1 at **400 V**	I_{min}: **0.01 A** , I_{max}: **5.00 A** P_{max}: **2000 VA**
Safety contacts: DC1 at **24 V**	I_{min}: **0.01 A** , I_{max}: **8.0 A** P_{max}: **200 W**
Auxiliary contacts: AC1 at **240 V**	I_{min}: **0.01 A** , I_{max}: **8.0 A** P_{max}: **2000 VA**
Auxiliary contacts: DC1 at **24 V**	I_{min}: **0.01 A** , I_{max}: **8.0 A** P_{max}: **200 W**
Utilisation category in accordance with **EN 60947-5-1**	
Safety contacts: AC15 at **230 V**	I_{max}: **5.0 A**
Safety contacts: DC13 at **24 V** (6 cycles/min)	I_{max}: **7.0 A**
Auxiliary contacts: AC15 at **230 V**	I_{max}: **5.0 A**
Auxiliary contacts: DC13 at **24 V** (6 cycles/min)	I_{max}: **7.0 A**
Contact material	**AgSnO2 + 0.2µ Au**

Up to PL e of EN ISO 13849-1
PNOZ X10

Electrical data	
External contact fuse protection (I_K = 1 kA) to **EN 60947-5-1**	
Blow-out fuse, quick	
Safety contacts:	**10 A**
Auxiliary contacts:	**10 A**
Blow-out fuse, slow	
Safety contacts:	**6 A**
Auxiliary contacts:	**6 A**
Circuit breaker 24 VAC/DC, characteristic B/C	
Safety contacts:	**6 A**
Auxiliary contacts:	**6 A**
Max. overall cable resistance R_{lmax} input circuits, reset circuits	
single-channel at U_B DC	**45 Ohm** No. 774709
single-channel at U_B AC	**45 Ohm** No. 774700, 774701, 774703, 774706
dual-channel without detect. of shorts across contacts at U_B DC	**90 Ohm** No. 774709
dual-channel without detect. of shorts across contacts at U_B AC	**90 Ohm** No. 774700, 774701, 774703, 774706
dual-channel with detect. of shorts across contacts at U_B DC	**15 Ohm** No. 774709
dual-channel with detect. of shorts across contacts at U_B AC	**15 Ohm** No. 774700, 774701, 774703, 774706
Min. input resistance in the starting torque	**89 Ohm**
Safety-related characteristic data	
PL in accordance with **EN ISO 13849-1**	**PL e** (**Cat. 4**)
Category in accordance with **EN 954-1**	**Cat. 4**
SIL CL in accordance with **EN IEC 62061**	**SIL CL 3**
PFH in accordance with **EN IEC 62061**	**2.31E-09**
SIL in accordance with **IEC 61511**	**SIL 3**
PFD in accordance with **IEC 61511**	**2.03E-06**
t_M in years	**20**
Times	
Switch-on delay	
with automatic reset typ.	**180 ms** No. 774700, 774701, 774703, 774706 **190 ms** No. 774709
with automatic reset max.	**250 ms**
with automatic reset after power on typ.	**200 ms**
with automatic reset after power on max.	**300 ms**
with manual reset typ.	**200 ms**
with manual reset max.	**250 ms**
on monitored reset with rising edge typ.	**150 ms** No. 774700, 774701, 774703, 774706 **165 ms** No. 774709
on monitored reset with rising edge max.	**200 ms** No. 774700, 774701, 774703, 774706 **220 ms** No. 774709
Delay-on de-energisation	
with E-STOP typ.	**20 ms**
with E-STOP max.	**30 ms**
with power failure typ.	**170 ms**
with power failure max.	**250 ms**
Recovery time at max. switching frequency 1/s	
after E-STOP	**50 ms**
after power failure	**300 ms**
Min. start pulse duration with a monitored reset	
with rising edge	**50 ms**
Simultaneity, channel 1 and 2	**150 ms**
Supply interruption before de-energisation	**35 ms**
Environmental data	
EMC	**EN 60947-5-1**, **EN 61000-6-2**
Vibration to **EN 60068-2-6**	
Frequency	**10 - 55 Hz**
Amplitude	**0.35 mm**

Pilz GmbH & Co. KG, Felix-Wankel-Straße 2, 73760 Ostfildern, Germany
Telephone: +49 711 3409-0, Telefax: +49 711 3409-133, E-Mail: pilz.gmbh@pilz.de

Up to PL e of EN ISO 13849-1
PNOZ X10

Environmental data	
Climatic suitability	**EN 60068-2-78**
Airgap creepage in accordance with **EN 60947-1**	
Pollution degree	**2**
Overvoltage category	**III**
Rated insulation voltage	**250 V**
Rated impulse withstand voltage	**4.00 kV**
Ambient temperature	**-10 - 55 °C**
Storage temperature	**-40 - 85 °C**
Protection type	
Mounting (e.g. cabinet)	**IP54**
Housing	**IP40**
Terminals	**IP20**
Mechanical data	
Housing material	
Housing	**PPO UL 94 V0**
Front	**ABS UL 94 V0**
Cross section of external conductors with screw terminals	
1 core flexible	**0.20 - 4.00 mm² , 24 - 10 AWG** No. 774701, 774703, 774706 **0.20 - 4.00 mm² , 24 - 10** No. 774700, 774709
2 core, same cross section, flexible:	
with crimp connectors, without insulating sleeve	**0.20 - 2.50 mm² , 24 - 14 AWG** No. 774701, 774703, 774706 **0.20 - 2.50 mm² , 24 - 14** No. 774700, 774709
without crimp connectors or with TWIN crimp connectors	**0.20 - 2.50 mm² , 24 - 14 AWG** No. 774701, 774703, 774706 **0.20 - 2.50 mm² , 24 - 14** No. 774700, 774709
Torque setting with screw terminals	**0.60 Nm**
Dimensions	
Height	**87.0 mm**
Width	**90.0 mm**
Depth	**121.0 mm**
Weight	**540 g** No. 774709 **720 g** No. 774700, 774701, 774703, 774706

No. stands for order number.

The standards current on **2009-04** apply.

Conventional thermal current

Number of contacts	I_{th} (A) at U_B DC	I_{th} (A) at U_B AC
1	**8.00 A** No. 774709	**8.00 A** No. 774700, 774701, 774703, 774706
2	**8.00 A** No. 774709	**7.00 A** No. 774700, 774701, 774703, 774706
3	**7.00 A** No. 774709	**5.60 A** No. 774700, 774701, 774703, 774706
4	**6.10 A** No. 774709	**4.90 A** No. 774700, 774701, 774703, 774706
5	**5.40 A** No. 774709	**4.40 A** No. 774700, 774701, 774703, 774706
6	**5.00 A** No. 774709	**4.00 A** No. 774700, 774701, 774703, 774706

Order reference

Type	Features	Terminals	Order no.
PNOZ X10	24 VAC	Screw terminals	774 700
PNOZ X10	42 VAC	Screw terminals	774 701
PNOZ X10	110 - 120 VAC	Screw terminals	774 703
PNOZ X10	230 - 240 VAC	Screw terminals	774 706
PNOZ X10	24 VDC	Screw terminals	774 709

Pilz GmbH & Co. KG, Felix-Wankel-Straße 2, 73760 Ostfildern, Germany
Telephone: +49 711 3409-0, Telefax: +49 711 3409-133, E-Mail: pilz.gmbh@pilz.de