Brand of NTN corporation

Technical data

EXP210

Bearing units



Grey cast housing, radial insert ball bearing with eccentric locking collar, seal with slinger

KIT CONTENT

EX.210.G2, P210

VISUAL (S)

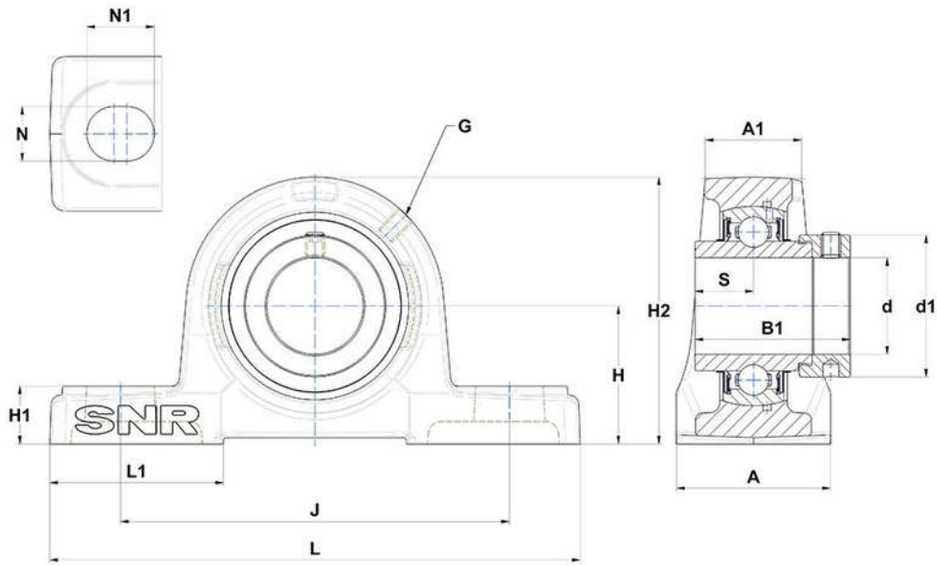

PRODUCT DEFINITION

Brand	SNR
A - Housing width	60 mm
A1 - Housing top width	39 mm
B - Width of Inner Ring	49,2 mm
d - Shaft diameter	50 mm
d1 - Outer dia of eccent. Lock. collar / nut of adapter sleeve	67,2 mm

NTN Europe
1 rue des Usines · BP 2017 · 74010 Annecy Cedex · France · Tel. +33 (0)4 50 65 30 00
S.A. au capital de 322 639 919 € · RCS ANNECY B 325 821 072 · Id. Fiscale : FR 48 325 821 072
SIRET 325 821 072 00015 · Code APE 2815 Z · Code NACE 28.15

PRODUCT DEFINITION	
G - Grease fitting	M6x1
H - Distance mounting base to centerline spheric. seating diam.	57,2 mm
H1 - Housing foot height	22 mm
H2 - Housing height	114 mm
J - Mounting holes distance	159 mm
L - Housing length	206 mm
L1 - Housing foot length	65 mm
N - Mounting hole dimension	20 mm
N1 - Mounting hole length	25 mm
S - Distance front side/bearing centre	24,6 mm

PRODUCT PERFORMANCE	
C - Dynamic load rating	35100000 mN
C0 - Static load rating	23200000 mN
Operating temperature min.	253,15 °K
Operating temperature max.	373,15 °K

OTHER FEATURES	
Mass	3,21 kg
Recommended tightening torque for set screw	11.5 N-m