128, av. du Maréchal-de-Lattre-de-Tassigny - 87045 LIMOGES Cedex
Tel.: 0 (+33) 5 55 06 87 87 - Fax: 0 (+33) 5 55 06 88 88
www.legrand.com

Batik™
Flush-mounting boxes for dry partitions

Cat. Nos.: 0 893 71/72/73/74/75

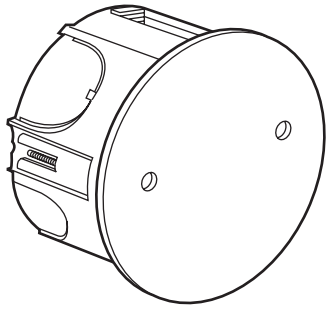

0 893 71

1. USE

Junction boxes for dry partitions.
Boxes to be flush-mounted on plasterboard and plywood.
Supplied with cover and screws.
Bottom can be knocked out (precut).

2. RANGE

References	Ext. boxes (mm)	Covers (mm)
0 893 71	Ø 85 x 40	100 x 100
0 893 72	115 x 115 x 40	135 x 135
0 893 73	160 x 105 x 40	190 x 135
0 893 74	170 x 170 x 50	195 x 195
0 893 75	230 x 170 x 50	250 x 210

Entries:

References	Sides	Bottom
0 893 71	-	-
0 893 72	2 x 16 / 4 x 20 / 4 x 25	2 x 20 / 1 x 32
0 893 73	2 x 16 / 2 x 20 / 6 x 25	2 x 20
0 893 74	8 x 20 / 6 x 25	2 x 20 / 3 x 25
0 893 75	10 x 20 / 8 x 25	2 x 20 / 2 x 25

3. OVERALL DIMENSIONS (mm)

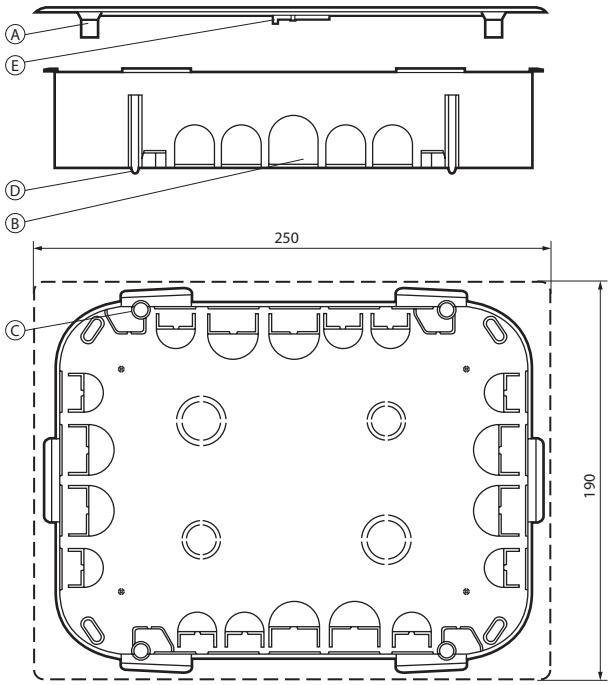

4. TECHNICAL CHARACTERISTICS

4.1 Material characteristics
Case: yellow polypropylène
Cover: white polypropylène
Screws: bright galvanized steel (cover screws: nickel-plated steel).
Self-extinguishing: 650° C / 30 s

4.2 Climatic characteristics
Use temperature : - 5° C to + 40° C
Storage temperature: - 5° C to + 60° C