DATASHEET - DILM115-22(RAC120)



Contactor, 380 V 400 V 55 kW, 2 N/O, 2 NC, RAC 120: 110 - 120 V 50/60 Hz, AC operation, Screw terminals

Powering Business Worldwide

Part no.	**DILM115-22(RAC120)**
Catalog No.	**239577**
Alternate Catalog No.	**XTCE115G22A**

Delivery program

Product range			Contactors
Application			Contactors for Motors
Subrange			Complete devices up to 170 A
Utilization category			AC-1: Non-inductive or slightly inductive loads, resistance furnaces AC-3/AC-3e: Normal AC induction motors: Starting, switching off while running AC-4: Normal AC induction motors: starting, plugging, reversing, inching
Connection technique			Screw terminals
			IE3
Notes			Also suitable for motors with efficiency class IE3. Also tested according to AC-3e.
Rated operational current			
AC-3			
380 V 400 V	I_e	A	115
AC-1			
Conventional free air thermal current, 3 pole, 50 - 60 Hz			
Open			
at 40 °C	$I_{th} = I_e$	A	160
enclosed	I_{th}	A	115
Conventional free air thermal current, 1 pole			
open	I_{th}	A	325
enclosed	I_{th}	A	285
Max. rating for three-phase motors, 50 - 60 Hz			
AC-3			
220 V 230 V	P	kW	37
380 V 400 V	P	kW	55
660 V 690 V	P	kW	90
AC-4			
220 V 230 V	P	kW	17
380 V 400 V	P	kW	28
660 V 690 V	P	kW	43
Contacts			
N/O = Normally open			2 N/O
N/C = Normally closed			2 NC
Instructions			Contacts to EN 50 012. integrated suppressor circuit in actuating electronics with mirror contact.
Contact sequence			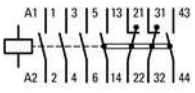
Actuating voltage			RAC 120: 110 - 120 V 50/60 Hz
Voltage AC/DC			AC operation

Technical data

General

Standards			IEC/EN 60947, VDE 0660, UL, CSA

Lifespan, mechanical			
AC operated	Operations	x 10^6	5.7
Operating frequency, mechanical			
AC operated	Operations/h		3600
Climatic proofing			Damp heat, constant, to IEC 60068-2-78 Damp heat, cyclic, to IEC 60068-2-30
Ambient temperature			
Open		°C	-25 - +60
Enclosed		°C	- 25 - 40
Storage		°C	- 40 - 80
Mounting position			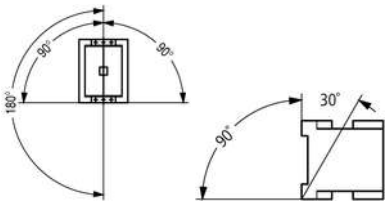
Mechanical shock resistance (IEC/EN 60068-2-27)			
Half-sinusoidal shock, 10 ms			
Main contacts			
N/O contact		g	10
Auxiliary contacts			
N/O contact		g	7
N/C contact		g	5
Mechanical shock resistance (IEC/EN 60068-2-27) when tabletop-mounted			
Half-sinusoidal shock, 10 ms			
Main contacts			
N/O contact		g	10
Auxiliary contacts			
N/O contact		g	7
N/C contact		g	5
Degree of Protection			IP00
Protection against direct contact when actuated from front (EN 50274)			Finger and back-of-hand proof
Altitude		m	Max. 2000
Weight			
AC operated		kg	2.31
Screw connector terminals			
Terminal capacity main cable			
Flexible with ferrule		mm^2	1 x (10 - 95) 2 x (10 - 70)
Stranded		mm^2	1 x (16 - 95) 2 x (16 - 70)
Solid or stranded		AWG	single 8…3/0, double 8…2/0
Flat conductor	Lamellenzahl x Breite x Dicke	mm	2 x (6 x 16 x 0.8)
Stripping length		mm	24
Terminal screw			M10
Tightening torque		Nm	14
Tool			
Hexagon socket-head spanner	SW	mm	5
Terminal capacity control circuit cables			
Solid		mm^2	1 x (0.75 - 2.5) 2 x (0.75 - 2.5)
Flexible with ferrule		mm^2	1 x (0.75 - 2.5) 2 x (0.75 - 2.5)
Solid or stranded		AWG	18 - 14
Stripping length		mm	10
Terminal screw			M3.5

Tightening torque		Nm	1.2
Tool			
Pozidriv screwdriver		Size	2
Standard screwdriver		mm	0.8 x 5.5 1 x 6

Main conducting paths

Rated impulse withstand voltage	U_{imp}	V AC	8000
Overvoltage category/pollution degree			III/3
Rated insulation voltage	U_i	V AC	690
Rated operational voltage	U_e	V AC	690
Safe isolation to EN 61140			
between coil and contacts		V AC	690
between the contacts		V AC	690
Making capacity (p.f. to IEC/EN 60947)			
	Up to 690 V	A	1610
Breaking capacity			
220 V 230 V		A	1150
380 V 400 V		A	1150
500 V		A	1150
660 V 690 V		A	1100
Short-circuit rating			
Short-circuit protection maximum fuse			
Type “2” coordination			
400 V	gG/gL 500 V	A	250
690 V	gG/gL 690 V	A	250
Type “1” coordination			
400 V	gG/gL 500 V	A	250
690 V	gG/gL 690 V	A	250

AC

AC-1			
Rated operational current			
Conventional free air thermal current, 3 pole, 50 - 60 Hz			
Open			
at 40 °C	$I_{th} = I_e$	A	160
at 50 °C	$I_{th} = I_e$	A	142
at 55 °C	$I_{th} = I_e$	A	135
at 60 °C	$I_{th} = I_e$	A	130
enclosed	I_{th}	A	115
Conventional free air thermal current, 1 pole			
open	I_{th}	A	325
enclosed	I_{th}	A	285
AC-3			
Rated operational current			
Open, 3-pole: 50 – 60 Hz			
Notes			At maximum permissible ambient temperature (open.) Also tested according to AC-3e.
220 V 230 V	I_e	A	115
240 V	I_e	A	115
380 V 400 V	I_e	A	115
415 V	I_e	A	115
440V	I_e	A	115
500 V	I_e	A	115
660 V 690 V	I_e	A	93
Motor rating	P	kWh	
220 V 230 V	P	kW	37

240V	P	kW	40
380 V 400 V	P	kW	55
415 V	P	kW	70
440 V	P	kW	75
500 V	P	kW	85
660 V 690 V	P	kW	90
AC-4			
Open, 3-pole: 50 – 60 Hz			
220 V 230 V	I_e	A	55
240 V	I_e	A	55
380 V 400 V	I_e	A	55
415 V	I_e	A	55
440 V	I_e	A	55
500 V	I_e	A	55
660 V 690 V	I_e	A	45
Motor rating	P	kWh	
220 V 230 V	P	kW	17
240 V	P	kW	19
380 V 400 V	P	kW	28
415 V	P	kW	33
440 V	P	kW	35
500 V	P	kW	40
660 V 690 V	P	kW	43

DC

Rated operational current, open			
DC-1			
60 V	I_e	A	160
110 V	I_e	A	160
220 V	I_e	A	90

Current heat loss

3 pole, at I_{th} (60°)		W	24.2
Current heat loss at I_e to AC-3/400 V		W	18.9
Impedance per pole		mΩ	0.6

Magnet systems

Voltage tolerance			
AC operated	Pick-up	x U_c	0.8 - 1.15
Drop-out voltage AC operated	Drop-out	x U_c	0.25 - 0.6
Power consumption of the coil in a cold state and 1.0 x U_S			
50 Hz	Pick-up	VA	180
50 Hz	Sealing	VA	3.1
50 Hz	Sealing	W	2.3
60 Hz	Pick-up	VA	170
60 Hz	Sealing	VA	3.1
60 Hz	Sealing	W	2.3
Duty factor		% DF	100
Changeover time at 100 % U_S (recommended value)			
Main contacts			
AC operated			
Closing delay		ms	28 - 33
Opening delay		ms	35 - 41
Arcing time		ms	15
Permissible residual current with actuation of A1 - A2 by the electronics (with 0 signal).		mA	≦ 1

Electromagnetic compatibility (EMC)

Emitted interference			according to EN 60947-1

Interference immunity		according to EN 60947-1

Rating data for approved types

Switching capacity		
Maximum motor rating		
Three-phase		
200 V 208 V	HP	40
230 V 240 V	HP	50
460 V 480 V	HP	100
575 V 600 V	HP	100
Single-phase		
115 V 120 V	HP	10
230 V 240 V	HP	25
General use	A	180
Auxiliary contacts		
Pilot Duty		
AC operated		A600
DC operated		P300
General Use		
AC	V	600
AC	A	15
DC	V	250
DC	A	1
Short Circuit Current Rating	SCCR	
Basic Rating		
SCCR	kA	10
max. Fuse	A	600
max. CB	A	600
480 V High Fault		
SCCR (fuse)	kA	30/100
max. Fuse	A	300/300 Class J
SCCR (CB)	kA	65
max. CB	A	250
600 V High Fault		
SCCR (fuse)	kA	30/100
max. Fuse	A	300/300 Class J
SCCR (CB)	kA	30
max. CB	A	350
Special Purpose Ratings		
Electrical Discharge Lamps (Ballast)		
480V 60Hz 3phase, 277V 60Hz 1phase	A	160
600V 60Hz 3phase, 347V 60Hz 1phase	A	160
Incandescent Lamps (Tungsten)		
480V 60Hz 3phase, 277V 60Hz 1phase	A	160
600V 60Hz 3phase, 347V 60Hz 1phase	A	160
Resistance Air Heating		
480V 60Hz 3phase, 277V 60Hz 1phase	A	160
600V 60Hz 3phase, 347V 60Hz 1phase	A	160
Refrigeration Control (CSA only)		
LRA 480V 60Hz 3phase	A	540
FLA 480V 60Hz 3phase	A	84
LRA 600V 60Hz 3phase	A	540
FLA 600V 60Hz 3phase	A	84

Definite Purpose Ratings (100,000 cycles acc. to UL 1995)			
LRA 480V 60Hz 3phase		A	690
FLA 480V 60Hz 3phase		A	115
Elevator Control			
200V 60Hz 3phase		HP	30
200V 60Hz 3phase		A	92
240V 60Hz 3phase		HP	40
240V 60Hz 3phase		A	104
480V 60Hz 3phase		HP	75
480V 60Hz 3phase		A	96
600V 60Hz 3phase		HP	100
600V 60Hz 3phase		A	99

Design verification as per IEC/EN 61439

Technical data for design verification			
Rated operational current for specified heat dissipation	I_n	A	115
Heat dissipation per pole, current-dependent	P_{vid}	W	6.3
Equipment heat dissipation, current-dependent	P_{vid}	W	18.9
Static heat dissipation, non-current-dependent	P_{vs}	W	2.3
Heat dissipation capacity	P_{diss}	W	0
Operating ambient temperature min.		°C	-25
Operating ambient temperature max.		°C	60
IEC/EN 61439 design verification			
10.2 Strength of materials and parts			
10.2.2 Corrosion resistance			Meets the product standard's requirements.
10.2.3.1 Verification of thermal stability of enclosures			Meets the product standard's requirements.
10.2.3.2 Verification of resistance of insulating materials to normal heat			Meets the product standard's requirements.
10.2.3.3 Verification of resistance of insulating materials to abnormal heat and fire due to internal electric effects			Meets the product standard's requirements.
10.2.4 Resistance to ultra-violet (UV) radiation			Meets the product standard's requirements.
10.2.5 Lifting			Does not apply, since the entire switchgear needs to be evaluated.
10.2.6 Mechanical impact			Does not apply, since the entire switchgear needs to be evaluated.
10.2.7 Inscriptions			Meets the product standard's requirements.
10.3 Degree of protection of ASSEMBLIES			Does not apply, since the entire switchgear needs to be evaluated.
10.4 Clearances and creepage distances			Meets the product standard's requirements.
10.5 Protection against electric shock			Does not apply, since the entire switchgear needs to be evaluated.
10.6 Incorporation of switching devices and components			Does not apply, since the entire switchgear needs to be evaluated.
10.7 Internal electrical circuits and connections			Is the panel builder's responsibility.
10.8 Connections for external conductors			Is the panel builder's responsibility.
10.9 Insulation properties			
10.9.2 Power-frequency electric strength			Is the panel builder's responsibility.
10.9.3 Impulse withstand voltage			Is the panel builder's responsibility.
10.9.4 Testing of enclosures made of insulating material			Is the panel builder's responsibility.
10.10 Temperature rise			The panel builder is responsible for the temperature rise calculation. Eaton will provide heat dissipation data for the devices.
10.11 Short-circuit rating			Is the panel builder's responsibility. The specifications for the switchgear must be observed.
10.12 Electromagnetic compatibility			Is the panel builder's responsibility. The specifications for the switchgear must be observed.
10.13 Mechanical function			The device meets the requirements, provided the information in the instruction leaflet (IL) is observed.

Technical data ETIM 8.0

Low-voltage industrial components (EG000017) / Power contactor, AC switching (EC000066)			
Electric engineering, automation, process control engineering / Low-voltage switch technology / Contactor (LV) / Power contactor, AC switching (ecl@ss10.0.1-27-37-10-03 [AAB718015])			
Rated control supply voltage Us at AC 50HZ		V	100 - 120
Rated control supply voltage Us at AC 60HZ		V	100 - 120

Rated control supply voltage Us at DC	V	0 - 0
Voltage type for actuating		AC
Rated operation current Ie at AC-1, 400 V	A	160
Rated operation current Ie at AC-3, 400 V	A	115
Rated operation power at AC-3, 400 V	kW	55
Rated operation current Ie at AC-4, 400 V	A	55
Rated operation power at AC-4, 400 V	kW	28
Rated operation power NEMA	kW	74
Modular version		No
Number of auxiliary contacts as normally open contact		2
Number of auxiliary contacts as normally closed contact		2
Type of electrical connection of main circuit		Screw connection
Number of normally closed contacts as main contact		0
Number of normally open contacts as main contact		3

Approvals

Product Standards		IEC/EN 60947-4-1; UL 508; CSA-C22.2 No. 14-05; CE marking
UL File No.		E29096
UL Category Control No.		NLDX
CSA File No.		012528
CSA Class No.		2411-03, 3211-04
North America Certification		UL listed, CSA certified
Specially designed for North America		No

Characteristics

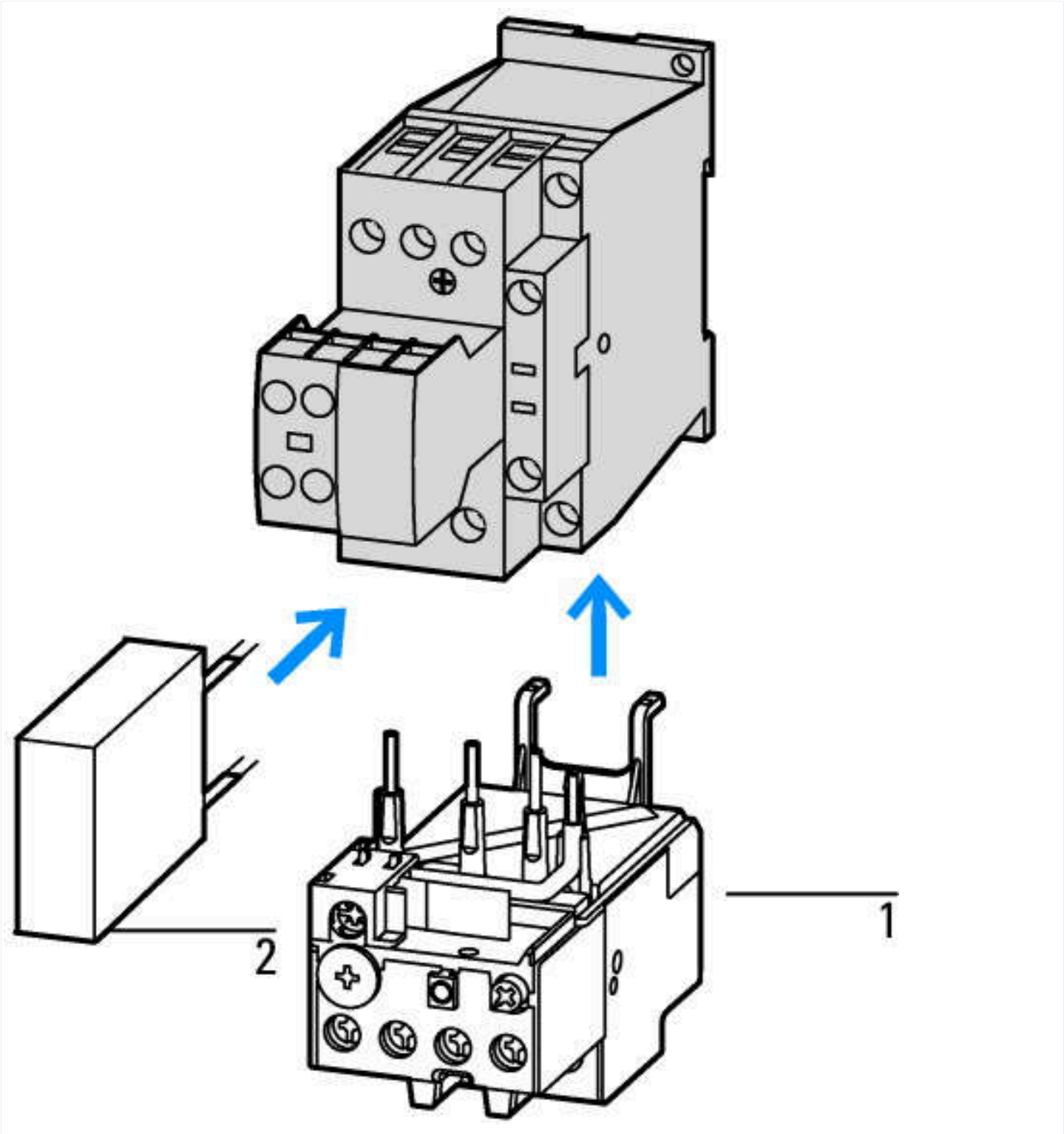

1: Overload relay
2: Suppressor

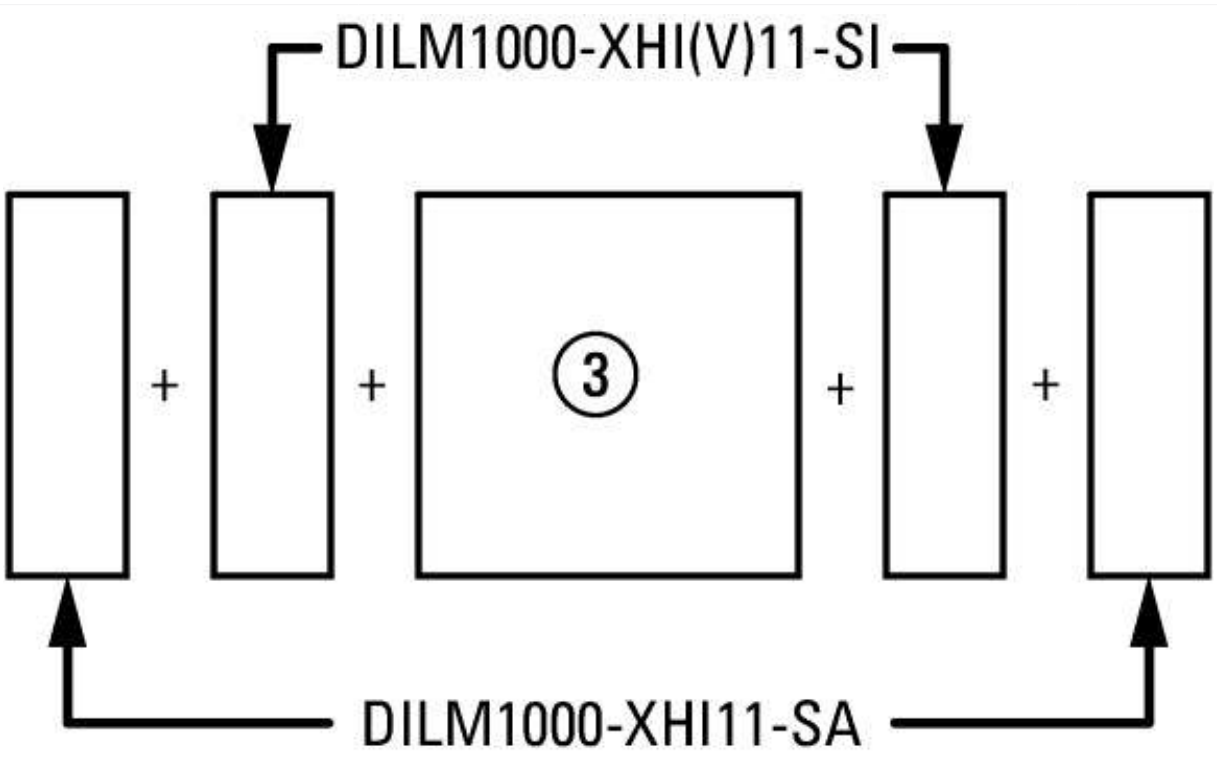

on the side: 2 x DILM820-XHI11(V)-SI; 2 x DILM820-XHI11-SA

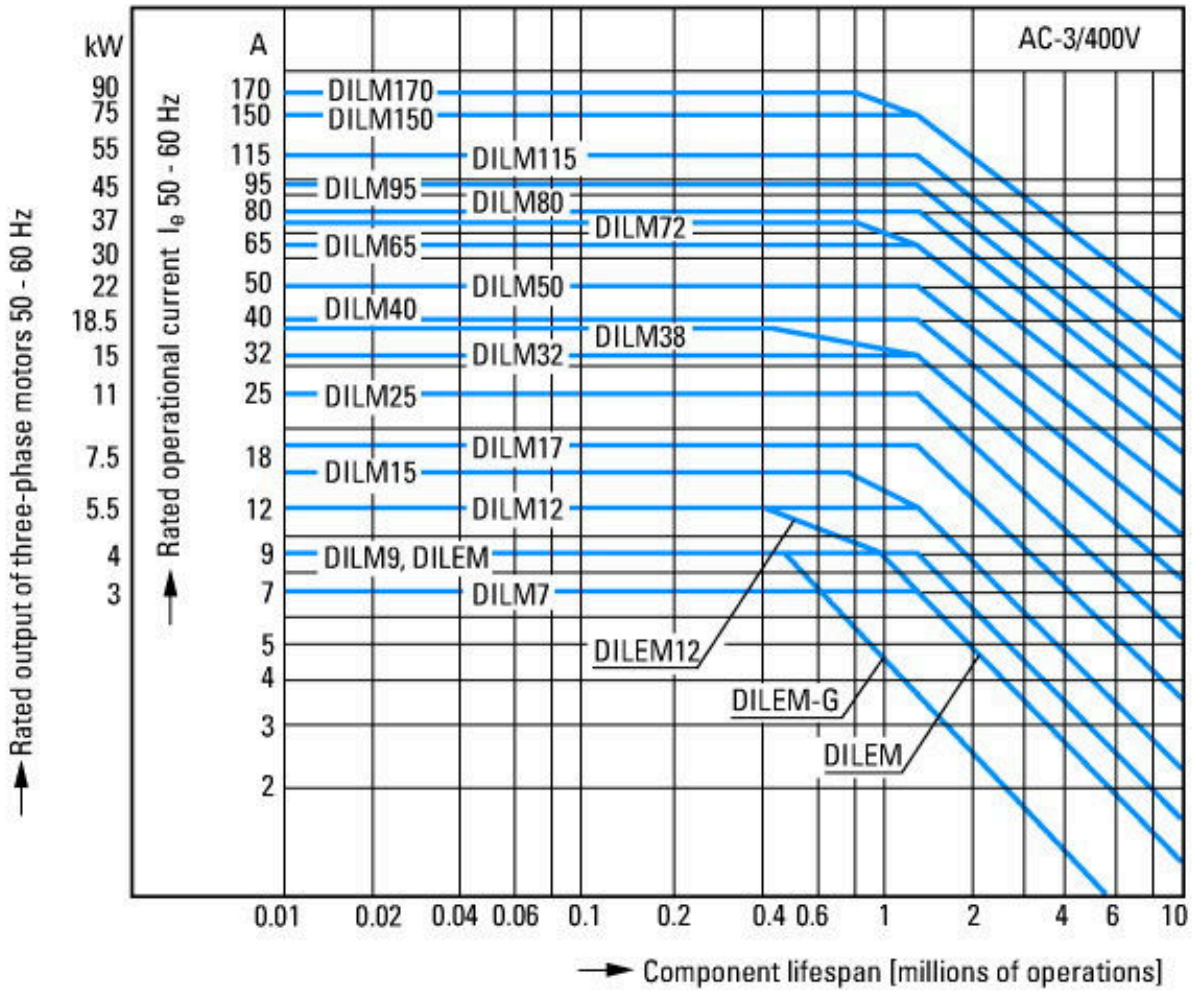

Squirrel-cage motor
Operating characteristics
Starting:from rest
Stopping:after attaining full running speed
Electrical characteristics
Make: up to 6 x rated motor current
Break: up to 1 x rated motor current
Utilization category
100 % AC-3
Typical applications

Compressors
Lifts
Mixers
Pumps
Escalators
Agitators
Fans
Conveyor belts
Centrifuges
Hinged flaps
Bucket-elevators
Air conditioning system
General drives in manufacturing and processing machines

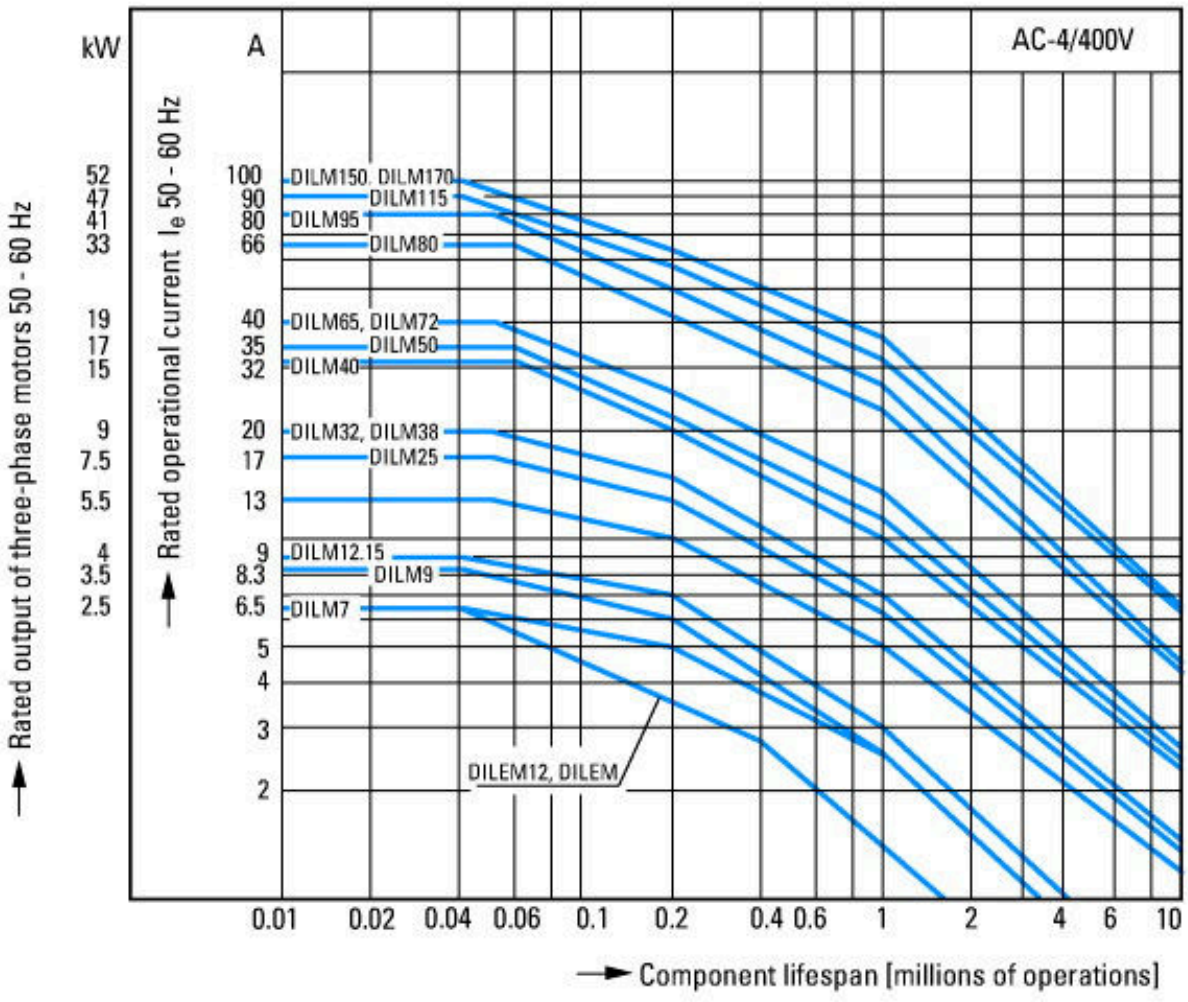

Extreme switching duty
Squirrel-cage motor
Operating characteristics
Inching, plugging, reversing
Electrical characteristics
Make: up to 6 x rated motor current
Break: up to 6 x rated motor current
Utilization category
100 % AC-4
Typical applications
Printing presses
Wire-drawing machines
Centrifuges
Special drives for manufacturing and processing machines

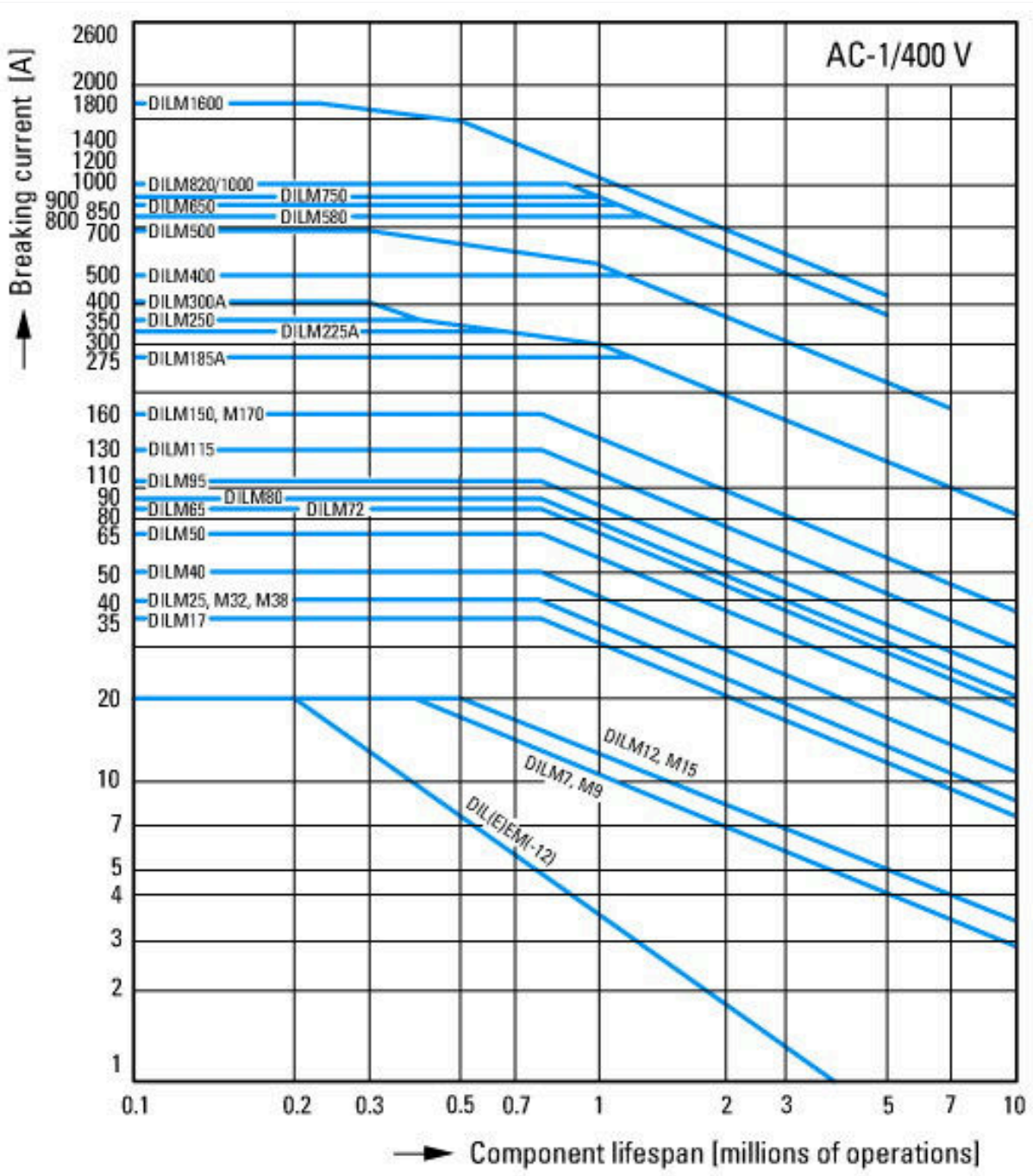

Switching conditions for non-motor consumers, 3 pole, 4 pole
Operating characteristics
Non inductive and slightly inductive loads
Electrical characteristics:
Switch on: 1 x rated operational current
Switch off: 1 x rated operational current
Utilization

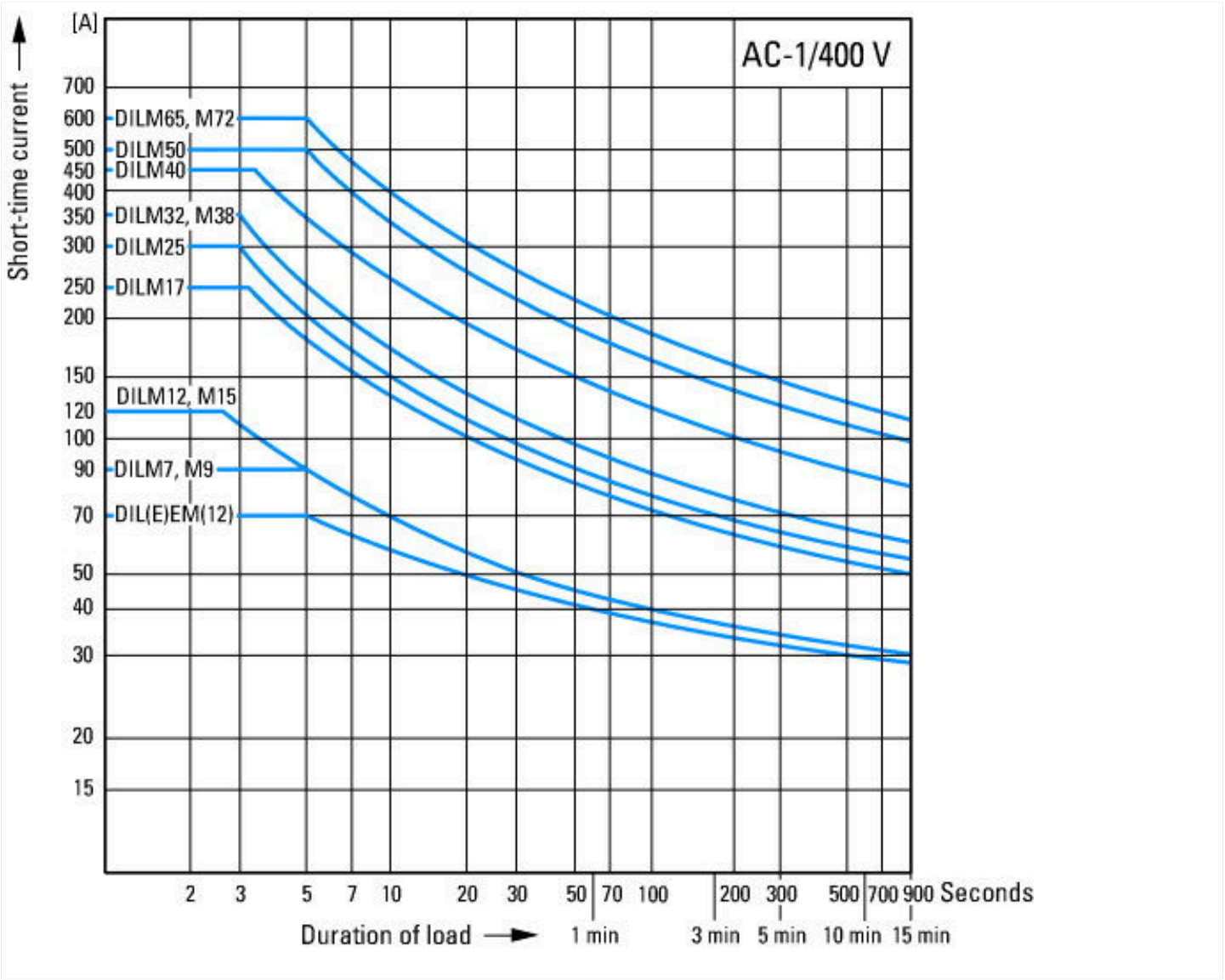

Dimensions

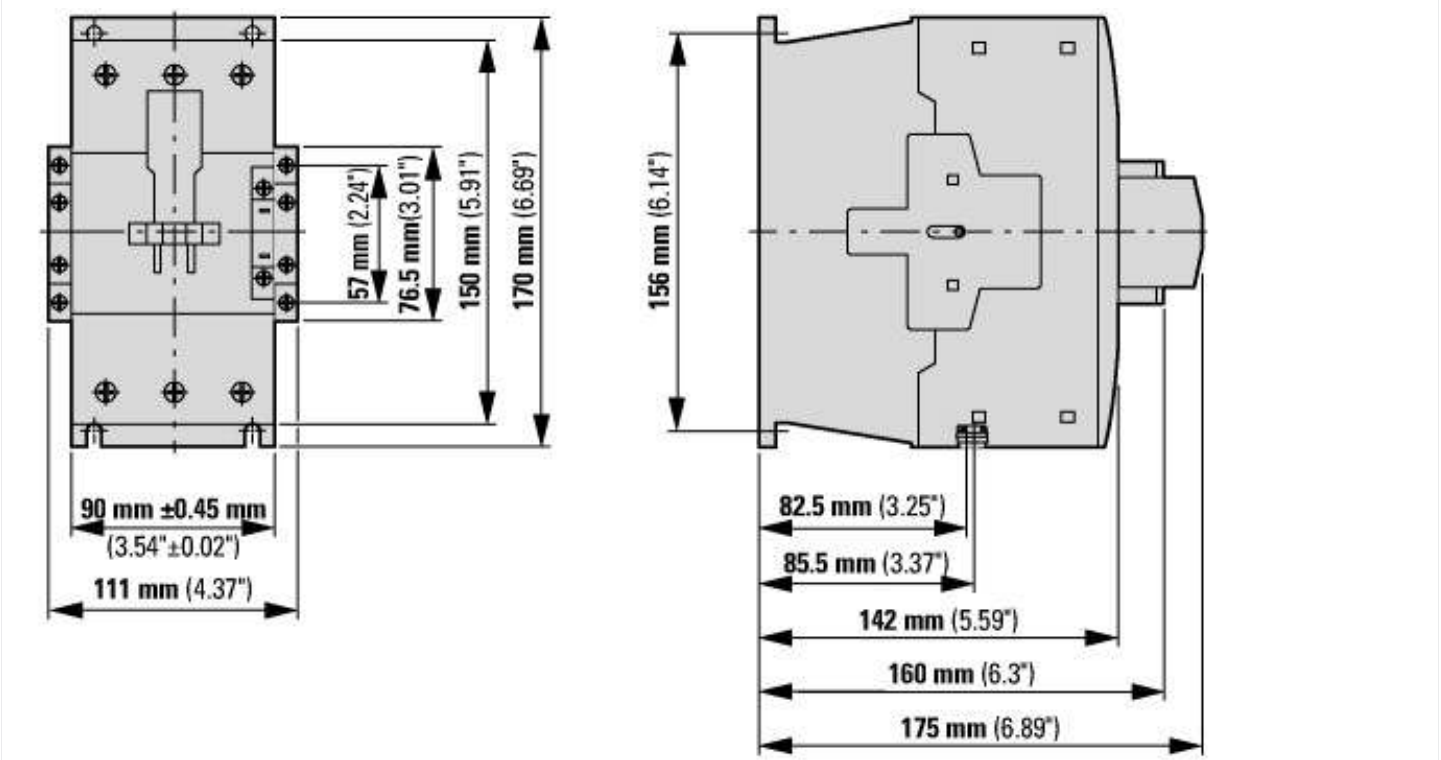

Contactor with auxiliary contact module

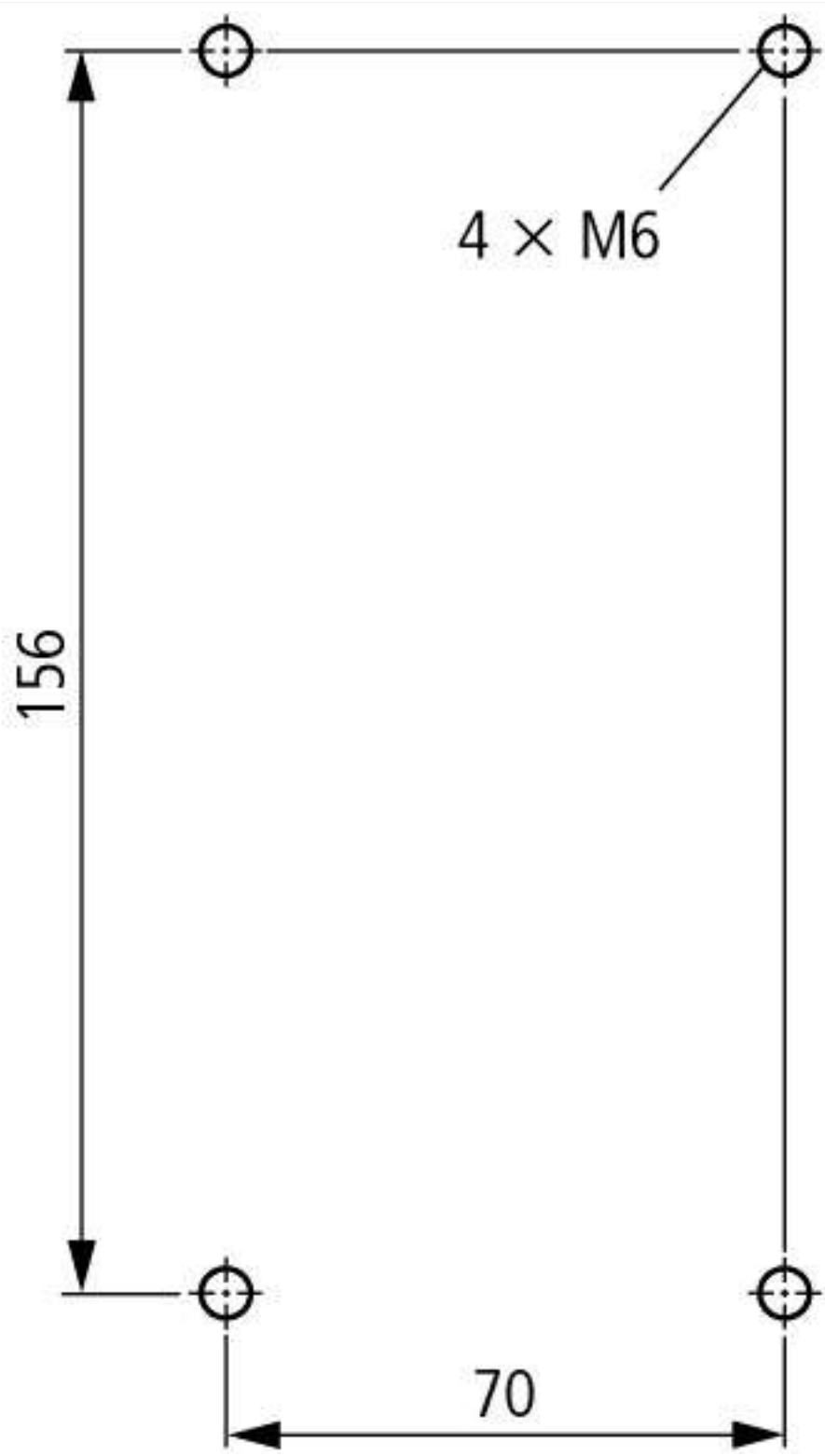

distance at side to earthed parts: 10 mm	
DILM80…DILM170 DILMC80…DILMC150 DILMF80…DILMF150	

Additional product information (links)

IL03407039Z (AWA2100-2286) Contactors	
IL03407039Z (AWA2100-2286) Contactors	https://es-assets.eaton.com/DOCUMENTATION/AWA_INSTRUCTIONS/IL03407039Z2021_07.pdf
Motor starters and "Special Purpose Ratings" for the North American market	http://www.eaton.eu/ecm/groups/public/@pub/@europe/@electrical/documents/content/pct_3258146.pdf
Switchgear of Power Factor Correction Systems	http://www.moeller.net/binary/ver_techpapers/ver934en.pdf
X-Start - Modern Switching Installations Efficiently Fitted and Wired Securely	http://www.moeller.net/binary/ver_techpapers/ver938en.pdf
Mirror Contacts for Highly-Reliable Information Relating to Safety-Related Control Functions	http://www.moeller.net/binary/ver_techpapers/ver944en.pdf

Effect of the Cabel Capacitance of Long Control Cables on the Actuation of Contactors	http://www.moeller.net/binary/ver_techpapers/ver949en.pdf
Switchgear for Luminaires	http://www.moeller.net/binary/ver_techpapers/ver955en.pdf
Standard Compliant and Functionally Safe Engineering Design with Mechanical Auxiliary Contacts	http://www.moeller.net/binary/ver_techpapers/ver956en.pdf
The Interaction of Contactors with PLCs	http://www.moeller.net/binary/ver_techpapers/ver957en.pdf
Busbar Component Adapters for modern Industrial control panels	http://www.moeller.net/binary/ver_techpapers/ver960en.pdf

© 07/2022 by Eaton Industries GmbH