E11906

Hexagon nut

NUT M12 CUZN 10PCS.

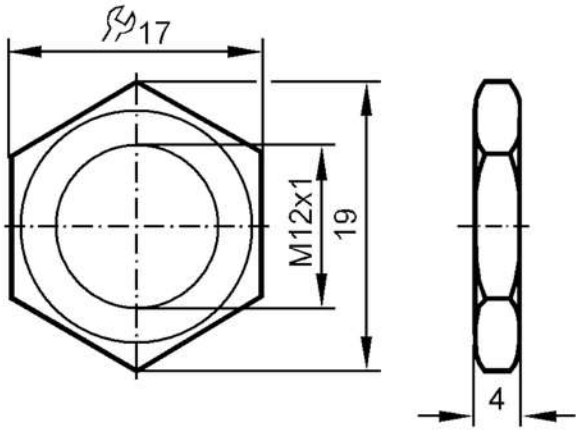

Mechanical data		
Weight	[g]	47.3
Dimensions	[mm]	M12 x 1
Thread designation		M12 x 1
Materials		brass nickel-plated
Remarks		
Pack quantity		10 pcs.