# IPRK 95 Retro-reflective photoelectric sensors with polarisation filter



**0 … 6.0m**
**0 … 0.3m**

10 - 30 V DC

- Polarised retro-reflective photoelectric sensor using visible red light
- The autocollimation principle used ensures that the device functions reliably over the entire range (0 … max.)
- Polarisation filter blocks unwanted reflections
- Complementary switching outputs for light/ dark switching or as a control function
- IPRK 95/44 L.3 uses a focussed light beam for maximum switching and positioning accuracy
- IPRK 95/44 L.21 with potentiometer for detection of:
  shrink-wrapped packing drums

IEC 60947... IEC 60947... IP 69K IP 67

## Accessories:

**(available separately)**

- Mounting systems (BT 95, UMS 1)
- M12 connectors (KD …)
- Reflectors
- Reflective tapes

## Dimensioned drawing

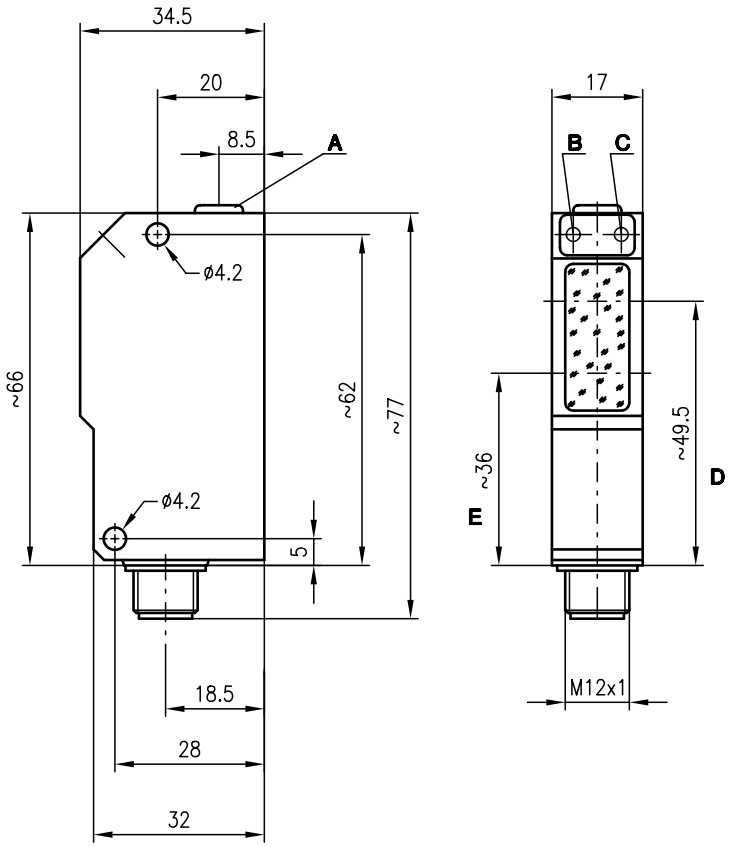


**A** Sensitivity adjustment (for IPRK 95/44 L.21)
**B** Switching indicator yellow
**C** Operation indicator green
**D** Optical axis receiver
**E** Optical axis transmitter

## Electrical connection

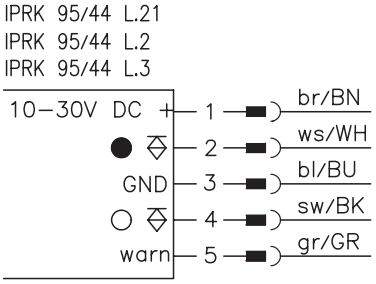


We reserve the right to make changes • 95_b04e.fm

## Specifications

| | IPRK 95/… L.2 (L.21) | IPRK 95/44 L.3 |
|---|---|---|
| **Optical data** | | |
| Typ. operating range limit [1] | 0 … 6m (TK(S) 100x100) | 0 … 0.3m (tape 2) |
| Operating range [2] | see tables | see tables |
| Light beam characteristic | divergent | focussed at 100mm |
| Light source | LED (modulated light) | |
| Wavelength | 660nm (visible red light, polarised) | |
| **Timing** | | |
| Switching frequency | 1000Hz | |
| Response time | 0.5ms | |
| Delay before start-up | ≤ 100ms | |
| **Electrical data** | | |
| Operating voltage $U_B$ | 10 … 30VDC (incl. residual ripple) | |
| Residual ripple | ≤ 15% of $U_B$ | |
| Bias current | ≤ 35mA | |
| Switching output | 2 PNP transistor outputs, complementary | |
| Function characteristics | light/dark switching | |
| Signal voltage high/low | ≥ ($U_B$-2V)/≤ 2V | |
| Output current | max. 100mA | |
| Sensitivity | adjustable via multiturn potentiometer | |
| **Indicators** | | |
| LED green | ready | |
| LED yellow | light path free | |
| LED yellow flashing | light path free, no performance reserve | |
| **Mechanical data** | | |
| Housing | diecast zinc | |
| Optics cover | glass | |
| Weight | 90g | |
| Connection type | M12 connector, stainless steel, 5-pin | |
| **Environmental data** | | |
| Ambient temp. (operation/storage)[3] | -25°C (-30°C) … +55°C/-40°C … +55°C | |
| Protective circuit [4] | 2,3 | |
| VDE safety class [5] | II, all-insulated | |
| Protection class | IP 67, IP 69K [6] | |
| LED class | 1 (acc. to EN 60825-1) | |
| Standards applied | IEC 60947-5-2 | |
| **Options** | | |
| **Warning output autoControl** warn | PNP transistor, counting principle | |
| Signal voltage high/low | ≥ ($U_B$-2V)/≤ 2V | |
| Output current | max. 100mA | |

1) Typ. operating range limit: max. attainable range without performance reserve
2) Operating range: recommended range with performance reserve
3) -30°C with operating voltage continuously applied
4) 2=polarity reversal protection, 3=short-circuit protection for all outputs
5) Rating voltage 250VAC
6) IP 69K test acc. to DIN 40050 part 9 simulated, high pressure cleaning conditions without the use of additives, acids and bases are not part of the test

## Tables

IPRK 95/… L.2

| | Reflectors | | Operating range |
|---|---|---|---|
| 1 | TK(S) | 100x100 | 0 … 4.2m |
| 2 | MTK(S) | 50x50 | 0 … 3.2m |
| 3 | TK(S) | 30x50 | 0 … 1.8m |
| 4 | TK(S) | 20x40 | 0 … 1.7m |
| 5 | Tape 2 | 100x100 | 0 … 1.2m |

| | | | | | | | | |
|---|---|---|---|---|---|---|---|---|
| 1 | 0 | | | | | | 4.2 | 6 |
| 2 | 0 | | | | | 3.2 | 5.4 | |
| 3 | 0 | | | | 1.8 | 3.0 | | |
| 4 | 0 | | | | 1.7 | 2.9 | | |
| 5 | 0 | | | 1.2 | 1.7 | | | |

Operating range [m]
Typ. operating range limit [m]

IPRK 95/44 L.3

| | Reflectors | | Operating range |
|---|---|---|---|
| | Tape 2 | 10x10 | 0 … 0.3m |

TK … = adhesive
TKS … = screw type
Tape 2 = adhesive

## Diagrams

IPRK 95/… L.2

Typ. response behaviour (TK 100x100)

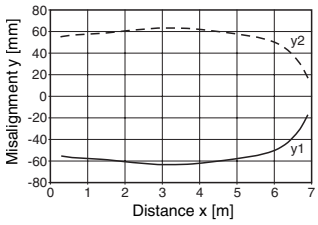


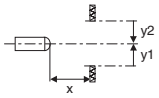


## Order guide

| | Designation | Part No. | UL |
|---|---|---|---|
| With PNP switching output 0 … 6.0m | IPRK 95/44 L.2 | 500 22680 | ● |
| With PNP switching output 0 … 0.3m | IPRK 95/44 L.3 | 500 22681 | ● |
| With PNP switching output 0 … 6.0m adjustable sensitivity | IPRK 95/44 L.21 | 501 02613 | |

## Remarks

- The retro-reflective photoelectric sensor with 3m operating range is also available with an integrated AS-i chip for direct connection to the AS-i system.