ELECTRONIC THERMOSTAT

DCT 010 | DC 20 to 56 V



- > High DC switching capacity
- > Adjustable temperature
- > Small hysteresis
- > Optical operating display (LED)
- > Integrated switch module
- > Precise measurement via an external sensor

The electronic thermostat with integrated switch module is used to control DC powered devices with high capacities in control and switch cabinets. Heaters, coolers, filter fans or signal devices can directly be controlled via an internal electronic circuit. The external sensor can be positioned freely anywhere in the control cabinet for precise temperature measurements. Additionally, this thermostat is available in versions that not only measure temperature via the external sensor, but also the relative humidity.

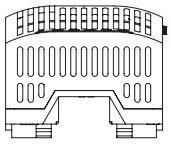

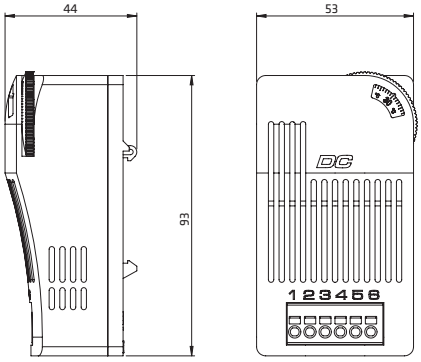

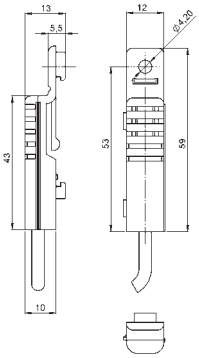

TECHNICAL DATA

Switch difference (temperature)	3 K (±1 K tolerance) at +25 °C (+77 °F), 50 % RH
Reaction time	approx. 5 sec.
External sensor	cable 2 m with snap in connector (included in the delivery)
Contact type	contact maker NO (MOSFET) or contact breaker NC (MOSFET)
Service life	> 100,000 cycles
Operating voltage	DC 20 to 56 V
Optical indicator	LED
Connection	6-pole terminal: stranded wire[1] 1.5 mm² (AWG 16); max. 2.5 mm² (AWG 12)
Mounting	clip for 35 mm DIN rail, EN 60715
Casing	plastic according to UL94 V-0, grey (bicolor)
Dimensions	93 x 53 x 44 mm
Weight	approx. 120 g (incl. sensor)
Fitting position	vertical
Storage temperature	-40 to +80 °C (-40 to +176 °F)
Operating / Storage humidity	max. 90 % RH (non-condensing)
Protection type	IP20
Approvals	UL File No. E164102, VDE, EAC
Note	other versions (e.g. setting ranges and °F) on request

[1] When connecting with stranded wires, wire end ferrules must be used.

Connection diagram

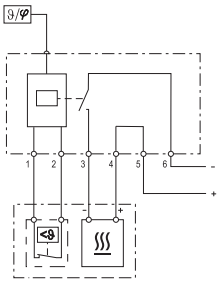

Example of connection

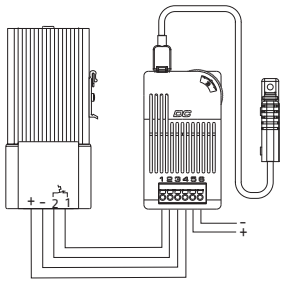

Art. No.	Max. switching capacity	Operating temperature	Primary switching function setting range temperature	Secondary switching function[2] humidity setting	Contact (primary)
01011.0-21	DC 13 A	-30 to +50 °C (-22 to +122 °F)	-10 to +50 °C	-	Contact maker (NO)
01011.0-22	DC 11 A	-30 to +60 °C (-22 to +140 °F)	0 to +60 °C	-	Contact maker (NO)
01011.0-41	DC 13 A	-30 to +50 °C (-22 to +122 °F)	-10 to +50 °C	65 % RH pre-set	Contact breaker (NC)
01011.0-42	DC 11 A	-30 to +60 °C (-22 to +140 °F)	0 to +60 °C	65 % RH pre-set	Contact breaker (NC)

[2] Versions with secondary switching function can also register the humidity and therefore offer an additional protection for electronics.
Switch difference: 4 % RH (±1 % tolerance) at +25 °C (+77 °F), 50 % RH.

www.stego.de | www.stego.co.uk | www.stegonorden.se

15.01.2018 | Specifications are subject to change without notice. Errors and omissions excepted. Suitability of this product for its intended use and any associated risks must be determined by the end customer/buyer in its final application.