APPLIANCE HOLDER STEGOFIX PLUS

SFP 095



Screw mounting



Self-adhesive tape mounting



Magnet mounting



Application example

- > Alternative to 35 mm DIN rail
- > Easy/flexible installation
- > For devices and sockets with DIN rail mounting clip
- > Screw mounting
- > Self-adhesive tape mounting
- > Magnet mounting

The applicance holder STEGOFIX PLUS is the flexible alternative to a 35 mm DIN rail. It allows for a quick and easy installation of small devices or accessory equipment intended for DIN rail mounting. STEGOFIX PLUS is suitable for devices with a clip width of max. 66 mm, offering a convenient mounting method for almost any application: screw mounting with 25 mm pitch, high-performance adhesive tape or rubberized neodymium magnets.

TECHNICAL DATA

Areas of application	devices with DIN rail mounting clip suitable for a 35 mm DIN rail according to EN 60715, max. clip width 66 mm
Mounting	
> Screw mounting	e.g. tapping screws DIN 7981 (ISO 7049), Ø 5.5 mm; thread-forming screws DIN 7500, M5; (not included in delivery)
> Self-adhesive tape mounting	adhesive surface 65 x 25 mm
> Magnet mounting	2 neodymium magnets, rubberized
Material	plastic according to UL94 V-0, black
Dimensions	71 x 40 x 15 mm
Operating temperature	-35 to +75 °C (-31 to +167 °F)
Storage conditions (self-adhesive tape)	optimal storage conditions for self-adhesive tape approx. +20 °C (+68 °F) at 50 % RH
Approvals	EAC

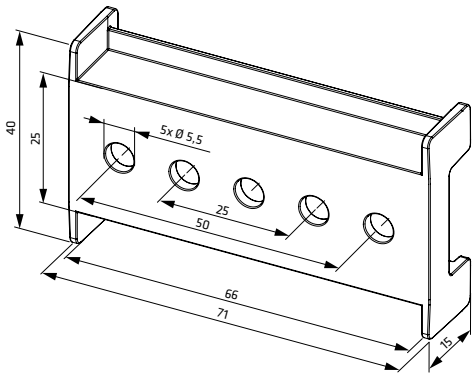

Art. No.	Model	Max. Holding force[1]	1 packing unit	Weight (approx.)
09550.0-05	Screw mounting	-	5 pieces	65 g (13 g / piece)
09550.1-05	Self-adhesive tape mounting	75 N	5 pieces	70 g (14 g / piece)
09550.2-05	Magnet mounting	30 N	5 pieces	145 g (29 g / piece)

[1] At room temperature. Depending on the conditions of use (e.g. surface condition, size of device to be mounted, etc.) the actual holding force may differ from the values specified in the table above.

www.stego.de | www.stego.co.uk | www.stegonorden.se

27.08.2018 | Specifications are subject to change without notice. Errors and omissions excepted. Suitability of this product for its intended use and any associated risks must be determined by the end customer/buyer in its final application.