Display & Programming overview.

Mode	Function	Parameter	▼	▲	Display	Default
Power = kW [%]	KW display		Min. Peak	Max. Peak	kW [%]	
Max. Limit [%]	Max. KW limit	5-100%/Off	Decrease	Increase	Off/Max. Limit [%]	80%
Min. Limit [%]	Min. KW limit	Off/5-100%	Decrease	Increase	Off/Min. Limit [%]	Off
Start Timer [S]	Starttimer	0.1-99.9 Sec.	Decrease	Increase	Ts [Sek.]	2.0 Sec.
Reaction Timer [S]	Max. Alarm Delay	0.0-99.9 Sec.	Decrease	Increase	Max. Tr [Sek.]	0.1 Sec.
Reaction Timer [S]	Min. Alarm Delay	0.0-99.9 Sec.	Decrease	Increase	Min. Tr [Sek.]	0.1 Sec.
Hysteresis [%]	2 point regulation	2-50%	Decrease	Increase	Hysteresis [%]	10 %
Current Range [A]	Current Range	1, 3, 5, 8 Amp.	Decrease	Increase	1, 3, 5, 8	5 Amp.

The HPL110A is programmed by the use of only three keys located at the front panel. See paragraph about programming on page 2. The parameters and their programming ranges are listed in the function table above. The function of the keys is repeated if continuously activated. Parameters are stored in EEPROM. When no key has been activaed for about 5 seconds the display returns to the kW[%] position.

LED usage

The HPL110A has a number of LED's, which are used to indicate to the user the condition of the unit, i.e. above trip points or alarms. The table below shows the usage of the LED's.

LED Usage	
Max. Alarm	Max. Limit LED flashing
Min. Alarm	Min. Limit LED flashing
Start Timer	Ts LED lit
Alarm Delay	Tr LED and Limit LED lit
Relay ON	Relay On LED lit

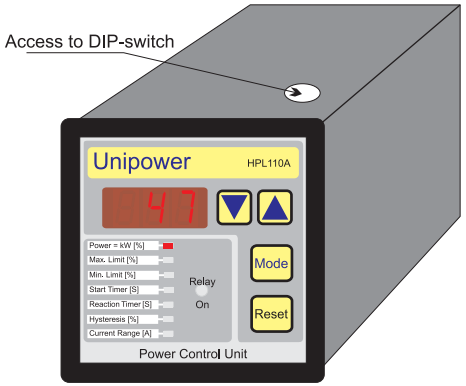

DIP. sw 1 'Off' = Programming enabled
DIP. sw 1 'On' = Programming dispbled (Protection)
DIP. sw 2 'Off' = Alarms normal
DIP. sw 2 'On' = Alarms special (see paragraph on page 3)

Figure 3

Note!!! An external current converter must always be mounted in the L3-phase for correct measurement. The converter polarity is not important.

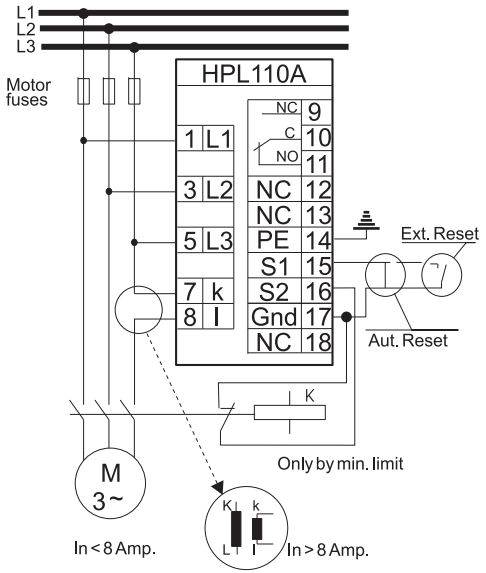

Unipower

HPL110A
Version 4.0

Technical Information — English Edition

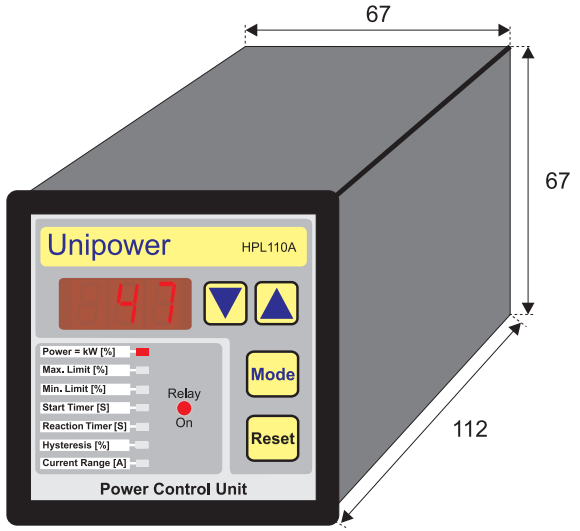

Technical Specifications.

Electrical

Power Supply (for Motor voltage)
3 x 380 - 3 x 440VAC (Standard type)
See technical info on the unit.

Available on request:
3 x 120 VAC -> 3 x 575 VAC

Current Range
Internal: max, 8 Amp.
External: N/1 or N/5 converter.

Cos(φ) Range: 0-1
Frequency Range: 45-65 Hz.
Consumption:
Power supplied from measuring circuit, 2VA
Relay spec.: 250 VAC/5 Amp.

Mechanical

Housing: Noryl
Mounting: Panel mounting.
Protection Class: IP54
Operating Temperature Range:-15 - +50 °C.
Weight: Approximately 400g. **Dimensions:**
D 112 x W 67 x H 67 mm.
CE mark to:

EN61326-1, EN61010-1

THE CONCEPT

The unipower HPL110A is a „low cost" member of a family of „Intelligent Power-Control Units". The unit measures true power-consumption and shows the consumption as a percentage of the selected power-range. The power-consumption (kW) is calculated from the following formula:

$$P = \sqrt{3} \times U \times I \times \cos\varphi$$

The primary function of the HPL110A lies in the supervision and control of machinery driven by 3-phased AC-motors. The HPL110A integrates a Max. and/or a Min. kW limit detector plus the support functions, including a peak detector, which are necessary to establish the efficient and compact supervision or regulation of various types of machinery such as pumps, fans and conveyer belts. The HPL110A has a built in current converter that works up to 8 Amps.

Generally.
The power measurement principle is based upon integration of the power in every period (20 ms at 50Hz). Therefore the HPL110A also measures true power consumption on non sine shaped loads such as frequency inverters.

Programming:
The HPL110A is programmed by the use of only three keys located on the front panel. The „Mode“ key is used to select one of the seven programmable parameters. When a parameter is chosen the value may be altered by the use of the arrow keys.

Measurement ranges:
The HPL110A has a built-in current converter that works up to 8A. One of four internal current ranges may be chosen: 1, 3, 5 or 8A. If the unit measures on loads where the current exceeds 8A an external current converter must be connected. This is done by connecting the secondary side of the converter to pin 7 and 8 and choose the 1A or 5A currrent range, depending on the converter (N/1 or N/5). The measurement range in kW = $\sqrt{3}$ x U x I, where U is the nominal voltage and I is the choosen current range or nominal primary current of the external current converter. Ex. 1A and 400V gives a measurement range of 0.692 kW corresponding to 100%.

Functions

The figure below shows a typical AC-motor power consumption curve (ex. pump) immediately after power has been applied to the motor. At the bottom of the figure a bar is shown indicating the position of the relay (On/Off).

Choosing limits:
Deciding the limits can be done in two ways: Theoretically or using the peak detectors in the HPL110A.

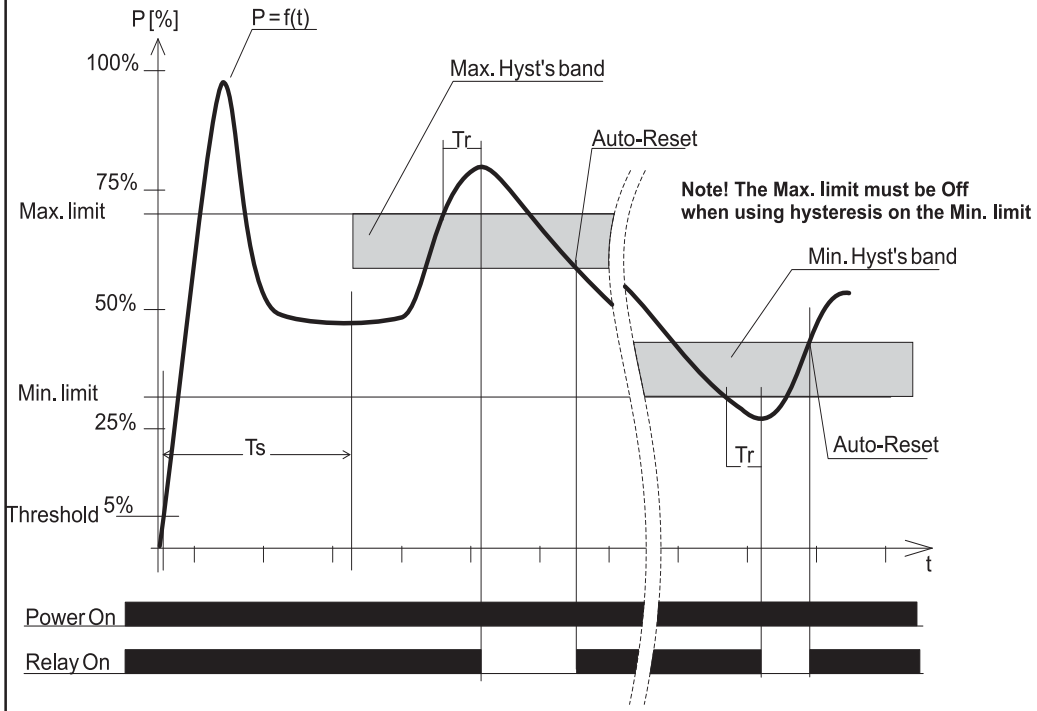

Theoretically:
Md = P2 x 60 / 2πn, where
Md: Torque where alarm should be given.
P2: Corresponding shaft power.
n: Revolutions in rev/min.
P1 = P2 + Po (Or from the efficiency curve of the motor).
Limit [%]= 100 x P1/P, where
P: Measurement range of the HPL110A.
The limits can be deactivated by setting the Min. limit to 0 and the Max. limit to 101%. When a limit is deactivated „Off“ is written on the display.

Peak detectors:
Leave the motor running at normal load and read the peak values by activating the arrow keys in kW[%] - mode. Place the Max. limit appropriately above the Max. peak value and the Min. limit appropriately below the min. peak value. The peak detectors may be reset seperately by pressing the relevant arrow key and at the same time activate the Reset key.

Ts: Start timer
The programmable start timer (Ts) is used to avoid alarms at motor start. The Ts delay function is activated after the power consumption reaches 5%. When Ts expires the limits, hysteresis and Tr become active. If the power consumption drops below 5%, the supervision is switched off again.

Tr: Reaction timer
The figure shows how the reaction timer (Tr) is activated after the limit is exceeded. Tr is used to avoid alarms, unless the limit has been exceeded for a certain time. If Tr is set to 0, Tr equals the measurement interval of 20ms (16.7ms at 60Hz).

Resetting alarms:
Alarms may be reset by the reset key on the front panel or by Input S1.

Input S1: Auto or external reset
External reset: S1 is connected to Gnd by the use of a switch or optocoupler output See fig. 2.
Auto reset: If S1 is connected to Gnd, Auto reset mode is enabled, which leads to reset of alarms by hysteresis.

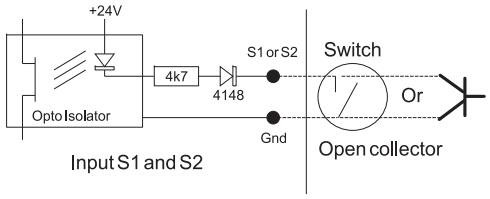

Figure 2

Hysteresis:
The figure to the left shows how possible Max. and Min. hysteresis bands are placed relatively to the limits. The hysteresis band always lies above a Min. limit and below a Max. limit. Hysteresis is activated when an alarm is generated and the external reset is active (Input S1, Auto reset mode). If Auto reset is chosen and both limits are active, only the Max. hysteresis band is active, because the HPL110A only has one relay.

Input S2: Blocking of alarms
Like Ts blocks for alarms during start of the motor, alarms can be ignored by setting S2 to Gnd.
Ex 1: If a brief overload is expected, a PLC output or the like may be used to block for a short period of time.
Ex 2: If the Min. kW limit is used, a spare break switch from the Motor Switch must be connected between the S2 input and Gnd, otherwise an alarm is generated each time the motor is switched off on purpose.

DIP switch:
The DIP switch is accessible through a hole in the housing (see figure 3).
SW.1 - No programming: The parameters may be read but nog altered, when SW.1 is On.
SW.2: If this switch is on, no Min. alarm will be given exceeding a Min. limit if kW[%] < 5% before Tr expires.