Inductive Sensors

BES M18MN-PAH16F-S04G
Order Code: BES04RM

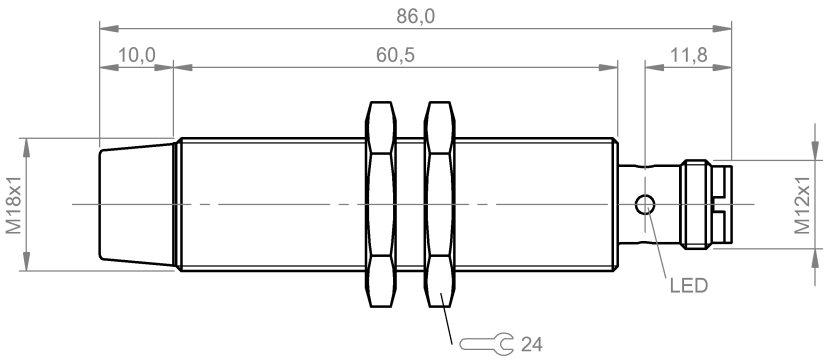

Basic features

Approval/Conformity	CE EAC WEEE cULus
Basic standard	IEC 60947-5-2

Display/Operation

Function indicator	yes
Power indicator	no

Electrical connection

Connection	M12x1-Male, 4-pin, A-coded
Polarity reversal protected	yes
Protection against device mix-ups	yes
Short-circuit protection	yes

Electrical data

Load capacitance max. at Ue	0.5 µF
Min. operating current Im	0 mA
No-load current Io max., damped	13 mA
No-load current Io max., undamped	7 mA
Operating voltage Ub	10...55 VDC
Output resistance Ra	33.0 kOhm + 2D
Protection class	II
Rated insulation voltage Ui	250 V AC
Rated operating current Ie	200 mA
Rated operating voltage Ue DC	24 V
Rated short circuit current	100 A
Ready delay tv max.	35 ms
Residual current Ir max.	10 µA
Ripple max. (% of Ue)	15 %
Switching frequency	430 Hz
Utilization category	DC -13
Voltage drop static max.	2.5 V

Environmental conditions

Ambient temperature	-40...85 °C
Contamination scale	3
EN 60068-2-27, Shock	Half-sinus, 30 g_n, 11 ms
EN 60068-2-6, Vibration	55 Hz, amplitude 1 mm, 3x30 min
IP rating	IP68

Functional safety

MTTF (40 °C)	271 a

Inductive Sensors

BES M18MN-PAH16F-S04G
Order Code: BES04RM

Interface

Switching output	PNP normally open/normally closed (NO/NC)

Material

Housing material	Brass, Nickel-free coated
Material sensing surface	PBT

Mechanical data

Dimension	Ø 18 x 86 mm
Installation	non-flush
Size	M18x1
Tightening torque	25 Nm

Range/Distance

Assured operating distance Sa	12.8 mm
Hysteresis H max. (% of Sr)	15.0 %
Rated operating distance Sn	16.0 mm
Real switching distance sr	16 mm
Repeat accuracy max. (% of Sr)	5.0 %
Switching distance marking	■■
Temperature drift max. (% of Sr)	15 %
Tolerance Sr	±10 %

Remarks

The sensor is functional again after the overload has been eliminated.
Flush: See installation instructions for inductive sensors with extended range 825357.
For more information about MTTF and B10d see MTTF / B10d Certificate

Indication of the MTTF- / B10d value does not represent a binding composition and/or life expectancy assurance; these are simply experiential values with no warranty implications. These declared values also do not extend the expiration period for defect claims or affect it in any way.

Connector Drawings



Wiring Diagrams

