SA31NA320R

SURGE PROTECTION DEVICE TYPE 3, WITH PLUG-IN CARTRIDGE, COMBINATION WAVE Uoc/Icw (1.2/50 µs, 8/20µs) 10kV/5kA, 1P+N, WITH CONTACT REMOTE



Product designation			Surge protection device (SPD)
Product type designation			SA3
Operating voltage type			AC
Application			AC Power lines
Number of poles			1P+N
Number of DIN modules			1
Relay output			Yes
SPD according to IEC/EN 61643-11			YES
Electrical features			
IEC Maximum continuous voltage Uc		V	320
IEC Combined surge Uoc/Isc 1,2/50- 8/20 (kV/kA)		kV/kA	10 / 5
IEC Voltage protection level Up (L-N/N-PE)		kV	<1.5 / <1.5
Temporary overvoltage (TOV) resistance Ut (L-N for 5s)		V	337
Tripping time ta (L-N/N-PE)		ns	<100
IEC Backup protection fuse with supply fuse >63A (L-N/N-PE)		Class/A	63A Gg
IEC Maximum short circuit current at 50Hz		kA	10
Status indicator - operating / end of life			Frontal indication/Aux contact
Ambient conditions			
Operating temperature			
	min	°C	-40
	max	°C	85
Max altitude		m	2000
Mechanical features			
Fixing			DIN rail
Conductor section Flexible max (IEC)		mm²	4 (L-N) / 25 (PE)
Conductor section Rigid max (IEC)		mm²	6 (L-N) / 35 (PE)
Weight		g	140
Relay output for remote status indication			
Rated current at			
	125V AC	A	3
	250V AC	A	0.5

Dimensions

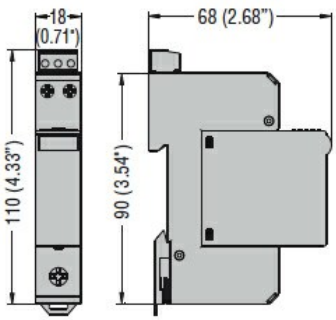

The characteristics described in this document are subject to updates or modifications at any time. The descriptions, technical and functional information, illustrations and instructions in this brochure are purely illustrative, and are consequently not contractually binding

Wiring diagrams

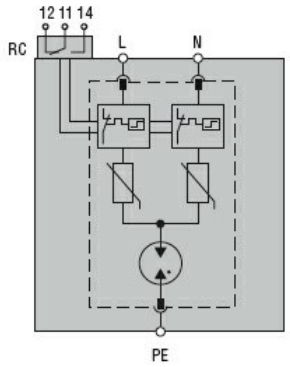

Certifications and compliance

Compliance

IEC/EN 61643-11

Certificates

EAC

The characteristics described in this document are subject to updates or modifications at any time. The descriptions, technical and functional information, illustrations and instructions in this brochure are purely illustrative, and are consequently not contractually binding