VEO

TIME RELAY / SINGLE-FUNCTION TIME RELAY

V2ZE10 24-240V AC/DC

Art.Nr.: 125110

V2ZE10P 24-240V AC/DC

Art.Nr.: 125610

- On-Delay
- 10 time ranges
- Supply voltage 24-240V AC/DC
- 1 change-over contact
- Width 22,5mm

Control elements

- Fine adjustment
- Setting of time range

Status indication

- LED U/t: Supply voltage
- LED R: Relay status



TECHNICAL DATA

SUPPLY CIRCUIT		
Terminals		A1-A2
Supply voltage		24 ... 240 V AC/DC
Supply voltage tolerance		-15 / +10 %
Rated frequency		50/60 Hz or DC
Rated frequency tolerance		48 ... 63 Hz
Rated consumption	230 V AC	typ. 0,35 W / 0,7 VA
	24 V DC	typ. 0,25 W / 0,25 VA
Standby consumption	230 V AC	typ. 0,16 W / 0,3 VA
	24 V DC	typ. 0,03 W / 0,09 VA
Duty-cycle		100%
Backup power time		< 30 ms
Recovery time		> 100 ms
Drop-out voltage		≥ 15,5 V

TIMING CIRCUIT		
Time ranges	10	0,05 ... 1 s
		0,15 ... 3 s
		0,5 ... 10 s
		1,5 ... 30 s
		3 ... 60 s
		9 ... 180 s
		0,5 ... 10 min
		3 ... 60 min
		0,5 ... 10 h
		5 ... 100 h

V2ZE10 24-240V AC/DC
Art.Nr.: 125110

V2ZE10P 24-240V AC/DC
Art.Nr.: 125610

RANGE OF FUNCTIONS

Functions	1	E

STATUS INDICATION

Supply voltage / time lapse	LED U/t (green) on	supply voltage applied
	LED U/t (green) flashes	indication of lapse of time
Relay status	LED R (yellow) on	output relay energized

OUTPUT CIRCUIT

Terminals		15-16-18
Kind of output		Relay
Number of contacts	change-over contact	1
Contact material		AgNi
Rated voltage (IEC 60947-5-1)		250 V
Maximum switching voltage		400 V AC
Minimum switching voltage / switching current		12 V / 10 mA
Rated current (IEC 60947-5-1)	AC-1	8 A / 250 V
	AC-15	1,5 A / 240 V (B300)
	DC-12	8 A / 24 V
Endurance	mechanical	20 x 10^6 switching cycles
	electrical (AC-1)	100 x 10^3 switching cycles
Rated frequency of operation	with load	6/min
	without load	1200/min
Fuse rating		8 A fast acting

ACCURACY

Base accuracy		< 1 % (of full scale)
Setting accuracy		< 5 % (of full scale)
Repeat accuracy		< 0,5 % or ±5 ms
Temperature influence		< 0,01 % / °C
Voltage influence		-
Frequency influence		-

V2ZE10 24-240V AC/DC
Art.Nr.: 125110

V2ZE10P 24-240V AC/DC
Art.Nr.: 125610

ENVIRONMENTAL CONDITIONS

Ambient temperature	operation	-25 ... +60 °C
	storage	-40 ... +70 °C
Relative humidity		5 ... 95 %
Vibration	EN 61812-1	10 ... 60 Hz: 0,15 mm; 60 ... 150 Hz: 20 m/s^2
	EN 60947-1	2 ... 13,2 Hz: 1 mm; 13,2 ... 100 Hz: 7 m/s^2
Shock	EN 60947-1	±150 m/s^2 11 ms

GENERAL DATA

Dimensions	W × H × D	22,5 x 67 x 76 mm
Mounting		DIN rail (EN60715)
Mounting position		any
Housing material		PA 66, self-extinguishing plastic, class V-0
Degree of protection	housing	IP40
	terminals	IP20
Electrical connection	V2ZE10	Screw terminal
Wire size	flexible with wire end ferrule	0,5 ... 2,5 mm^2 (20 AWG ... 13 AWG)
	flexible without wire end ferrule	0,5 ... 4 mm^2 (20 AWG ... 12 AWG)
	rigid	0,5 ... 4 mm^2 (20 AWG ... 12 AWG)
Stripping length		8 mm
Tightening torque		max. 1Nm
Electrical connection	V2ZE10P	Push-in terminal
Wire size	flexible with wire end ferrule	0,25 ... 1,5 mm^2 (24 AWG ... 16 AWG)
	flexible with plastic ferrule	0,25 ... 0,75 mm^2 (24 AWG ... 19 AWG)
	flexible without wire end ferrule	0,2 ... 1,5 mm^2 (24 AWG ... 16 AWG)
	rigid	0,2 ... 1,5 mm^2 (24 AWG ... 16 AWG)
Stripping length		8 mm
MTTF		-
Weight		84 g

ISOLATION DATA

Pollution degree (IEC 61812-1)	2
Overvoltage category (IEC 61812-1)	III

V2ZE10 24-240V AC/DC
Art.Nr.: 125110

V2ZE10P 24-240V AC/DC
Art.Nr.: 125610

ISOLATION DATA

Rated Insulation voltage (IEC 61812-1)	supply circuit / output cicuit	300 V
Rated impulse withstanding voltage (IEC 61812-1)	supply circuit / output cicuit	6 kV
Insulation test voltage (IEC 61812-1)	supply circuit / output cicuit	3200 V
Insulation	supply circuit / output cicuit	protective seperation

STANDARDS

Product standard		IEC 61812-1
Interference immunity	IEC 61812-1	class A
Interference emission	IEC 61812-1	class A
Approvals		

V2ZE10 24-240V AC/DC
Art.Nr.: 125110

V2ZE10P 24-240V AC/DC
Art.Nr.: 125610

FUNCTIONS

ON delay (E)
When the supply voltage U is applied, the set interval t begins (green LED U/t flashes). After the interval t has expired (green LED U/t illuminated) the output relay R switches into on-position (yellow LED illuminated). This status remains until the supply voltage is interrupted. If the supply voltage is interrupted before the expiry of the interval t, the interval already expired is erased and is restarted when the supply voltage is next applied.



V2ZE10 24-240V AC/DC
Art.Nr.: 125110

V2ZE10P 24-240V AC/DC
Art.Nr.: 125610

CONNECTIONS

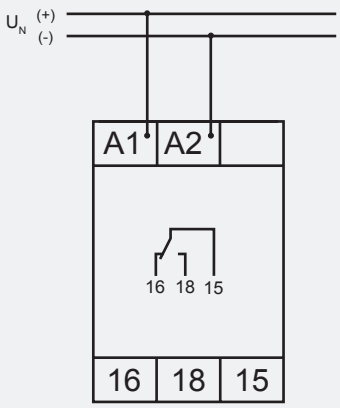

V2ZE10 24-240V AC/DC
Art.Nr.: 125110

V2ZE10P 24-240V AC/DC
Art.Nr.: 125610

DIMENSIONS

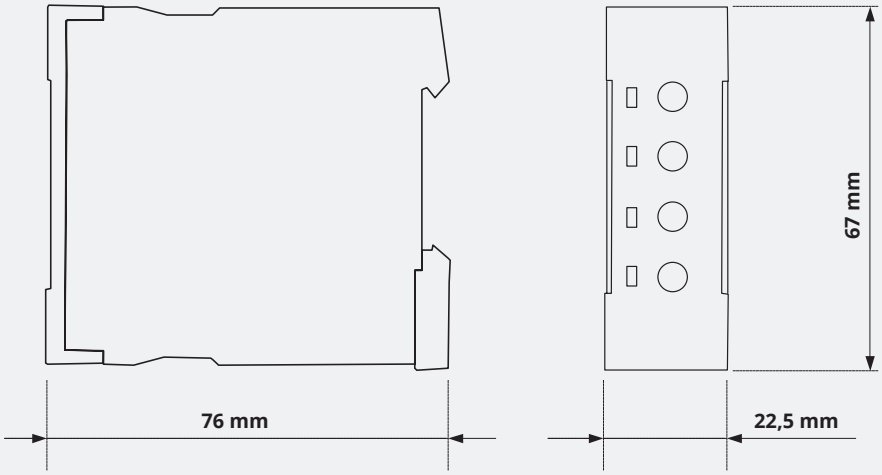

CONTACT

TELE Haase Steuergeräte Ges.m.b.H.

Vorarlberger Allee 38
1230 Vienna
Austria

CALL US +43 / 1 / 614 74 - 0

ONLINE SUPPORT info@tele-online.com