LK8124

Electronic level sensor

LK0728B-B-00KVPKG/US

For 8-pole sockets the core colours are not standardised.
Please note the wiring of the sensor and the sockets (see data sheet).

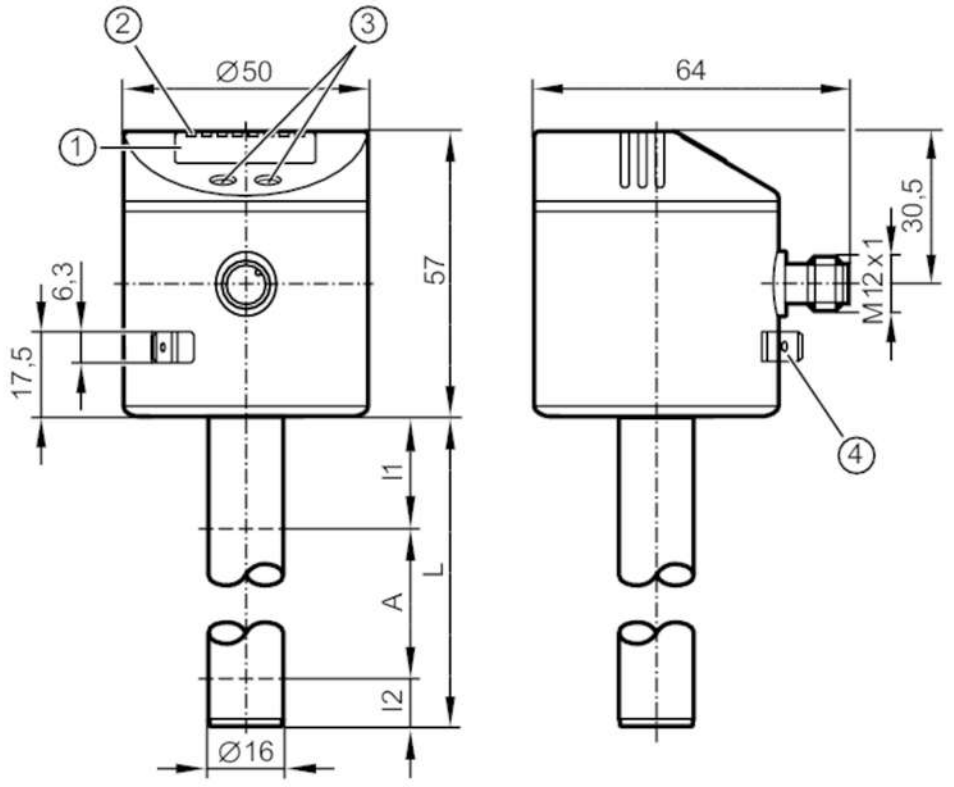

1 alphanumeric display 4-digit
2 status LEDs
3 programming buttons
4 housing connection flat-pin connector 6.3 mm DIN 46244

Product characteristics			
Number of inputs and outputs		Number of digital outputs: 4	
Factory setting		hydrous coolants; water; media similar to water	
Probe length L	[mm]	728	
Application			
Media		hydrous coolants; oils; oil-based media; water; media similar to water	
Dielectric constant of the medium		> 2	
Cannot be used for		extremely conductive media; adhering media; granulates; bulk material; acids; alkali; hygienic areas and electroplating applications	
Maximum speed of the change of level	[mm/s]	300	
Tank pressure		0.5; (when mounting with mounting accessories: E43001 - E43007, E43019) bar	0.05; (when mounting with mounting accessories: E43001 - E43007, E43019) MPa
Coolants			
Medium temperature	[°C]	0...35; (with climatic tube E43102: 35...55 °C)	

LK8124

Electronic level sensor

LK0728B-B-00KVPKG/US

Oil		
Medium temperature	[°C]	0...70
Medium temperature short time	[°C]	0...90; (< 1 h)
Water		
Medium temperature	[°C]	0...35; (with climatic tube E43102 ; 35...55 °C)
Electrical data		
Operating voltage	[V]	18...30 DC
Current consumption	[mA]	< 50
Protection class		III
Reverse polarity protection		yes
Power-on delay time	[s]	< 3
Measuring principle		capacitive
Inputs / outputs		
Number of inputs and outputs		Number of digital outputs: 4
Outputs		
Total number of outputs		4
Output signal		switching signal; IO-Link
Electrical design		PNP/NPN
Number of digital outputs		4
Output function		normally open / normally closed; (parameterisable)
Max. voltage drop switching output DC	[V]	2.5
Permanent current rating of switching output DC	[mA]	200
Short-circuit protection		yes
Type of short-circuit protection		thermal, pulsed
Overload protection		yes
Measuring/setting range		
Factory setting		hydrous coolants; water; media similar to water
Probe length L	[mm]	728
Active range A	[mm]	585
Inactive range I1 / I2	[mm]	104 / 39
Setting range		
Set point SP	[mm]	60...590
Reset point rP	[mm]	50...580
In steps of	[mm]	10
Reference point OP	[mm]	200 - 240 - 280 - 310 - 350 - 390 - 420 - 460 - 500 - 530 - 570 - 610 - OFF
Hysteresis, OP	[mm]	4
Accuracy / deviations		
Measuring error [% of the final value]		± 5
Repeatability		± 2

LK8124

Electronic level sensor

LK0728B-B-00KVPKG/US

Resolution	[mm]	10	
Software / programming			
Parameter setting options		hysteresis / window; normally open / normally closed; switching logic; SP/rP position; adjustment OP; medium selection; offset setting; switch-on/switch-off delay	
Interfaces			
Communication interface		IO-Link	
Transmission type		COM2 (38,4 kBaud)	
IO-Link revision		1.1	
SDCI standard		IEC 61131-9	
Profiles		Smart Sensor: Process Data Variable; Device Identification, Device Diagnosis	
SIO mode		yes	
Required master port type		A	
Process data analogue		2	
Process data binary		4	
Min. process cycle time	[ms]	3.2	
Supported DeviceIDs		**Type of operation**	**DeviceID**
		default	23
Operating conditions			
Ambient temperature	[°C]	0...60	
Storage temperature	[°C]	-25...80	
Protection		IP 67	
Tests / approvals			
EMC		DIN EN 61000-6-2	
		DIN EN 61000-6-4	
Shock resistance		DIN EN 60068-2-27	15 g (11 ms)
Vibration resistance		DIN EN 60068-2-6	5 g (10...2000 Hz)
MTTF	[years]	227	
Mechanical data			
Weight	[g]	549.4	
Dimensions	[mm]	Ø 16	
Materials		stainless steel (304/1.4301); stainless steel (316L/1.4404); FKM; NBR; PBT; PC; PA; PP; TPV	
Materials (wetted parts)		PP	
Displays / operating elements			
Display		Display unit	2 x LED, green (cm, inch)
		switching status	4 x LED, yellow (OUT4...OUT1)
		measured values	alphanumeric display, 4-digit
		parameter setting	alphanumeric display, 4-digit
Remarks			
Pack quantity		1 pcs.	

LK8124

Electronic level sensor

LK0728B-B-00KVPKG/US

Electrical connection

Connector: 1 x M12; coding: A



Connection

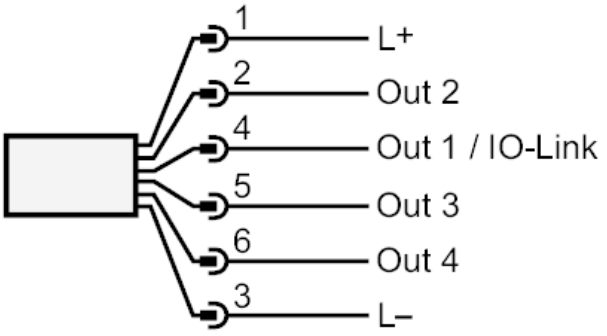

OUT1:	switching output IO-Link
OUT2...4:	switching output