lumbergautomation
A BELDEN BRAND



Product: RSMEK 3

M8 Insert Sensor/Actuator Receptacle Connector: Male, insert, M8 - mating side, print contacts - connecting side, 3-pin, A-coded, unshielded, black body, 50 AC / 60 DC, 4 A

Product Description

M8 Insert Sensor/Actuator Receptacle Connector: Male, insert, M8 - mating side, print contacts - connecting side, 3-pin, A-coded, unshielded, black body, 50 AC / 60 DC, 4 A

Technical Drawing

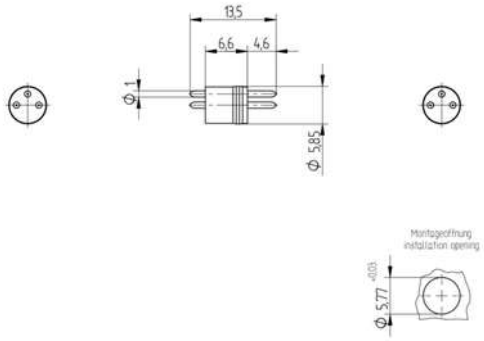

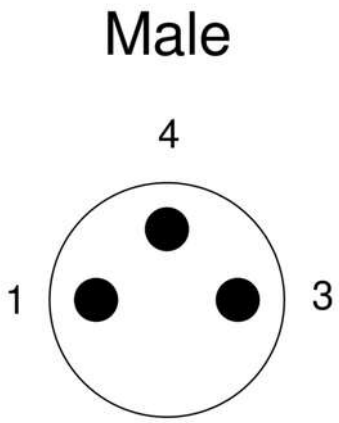

Technical Specifications

Technical Data

Product Family:	Sensor / Actuator Connectors
Product Sub Family:	M8 Insert
Mating Side:	M8
Connecting Side:	Print Contacts
Brand:	Lumberg Automation
Connector Type:	Receptacle
Type of Contact / Gender:	Male
Connector Design:	Insert
Number of Pins:	3
Coding:	A
Shielding:	Unshielded
Rated Voltage:	60 V
Rated Impulse Voltage:	1.5 kV
Operating Voltage:	50 AC / 60 DC
Rated Current*:	4 A
Contact Resistance:	≤ 10 mOhm
Insulation Resistance:	> 10^9 Ohm
Mating Cycles:	≤ 100
Type of Connection:	PCB

Ambient Temperature (Operation)*:	- 25 °C - + 85 °C
Design Standard:	IEC 61076-2-104
Pollution Degree:	3 acc. to DIN EN 60664-1 (VDE 0110-1)
Overvoltage Category:	III acc. to DIN EN 60664-1 (VDE 0110-1)

Materials

Contact Base Material:	CuZn
Contact Plating:	Cu/Au
Contact Bearer Material:	PA
Contact Bearer Color:	Black
Flammability Class (Contact Bearer):	UL 94 V-0
Potted:	No

Safety & Environmental Compliance

RoHS Compliant:	yes

Notes

Note Derating:	* Notice derating
Protection Degree / IP Rating Note:	* only if mounted and locked in combination with Hirschmann / Lumberg connector. On the installation side tightness has to be assured by taking proper measures.

Variants

Item #	Item Description
11667	RSMEK 3

© 2024 Belden, Inc

All Rights Reserved.

Although Belden makes every reasonable effort to ensure their accuracy at the time of this publication, information and specifications described here in are subject to error or omission and to change without notice, and the listing of such information and specifications does not ensure product availability.

Belden provides the information and specifications herein on an "ASIS" basis, with no representations or warranties, whether express, statutory or implied. In no event will Belden be liable for any damages (including consequential, indirect, incidental, special, punitive, or exemplary damages) whatsoever, even if Belden has been advised of the possibility of such damages, whether in an action under contract, negligence or any other theory, arising out of or in connection with the use, or inability to use, the information or specifications described herein.

All sales of Belden products are subject to Belden's standard terms and conditions of sale.

Belden believes this product to be in compliance with all applicable environmental programs as listed in the data sheet. The information provided is correct to the best of Belden's knowledge, information and belief at the date of its publication. This information is designed only as a general guide for the safe handling, storage, and any other operation of the product itself or the one that it becomes a part of. The Product Disclosure is not to be considered a warranty or quality specification. Regulatory information is for guidance purposes only. Product users are responsible for determining the applicability of legislation and regulations based on their individual usage of the product.